The Whalen Company

PRODUCT DESIGN GUIDE

Inteli-therm™ Vertical Stack Fan Coil with Slide-Out Coil Pack

January 2022

whalencompany.com

Category	Position		Option Digit and Description
Product Family	1	W	W - Whalen Fan Coil
Chassis Design	2	T	T - Inteli-therm Integrated Thermal Recovery Unit (Enthalpy Core)
		N	N - Inteli-therm Integrated Thermal Recovery Unit (Sensible Core)
Coil Rows	3	X	X - Slide-out Coil Pack
Unit Capacity	4,5	03	03 - 300 CFM - 0.75-ton Vertical Stack Fan Coil
		04	04 - 400 CFM - 1.0-ton Vertical Stack Fan Coil
		06	06 - 600 CFM - 1.5-ton Vertical Stack Fan Coil
		08	08 - 800 CFM - 2.0-ton Vertical Stack Fan Coil
		10	10 - 1000 CFM - 2.5-ton Vertical Stack Fan Coil
		12	12 - 1200 CFM - 3.0-ton Vertical Stack Fan Coil
System Configuration	6	2	2 - 2-pipe Heating & Cooling
		4	4 - 4-pipe Heating & Cooling
		C	C - Cooling only unit operation
		H	H - Heating only unit operation
Revision (Major)	7	A	A - 1st Generation
Unit Voltage	8	A	A - Single Point Power: 115-60-1
		E	E - Dual Point Power: 115-60-1
		F	F - Dual Point Power: 208/230-60-1
		H	H - Dual Point Power: 265-60-1
Fan	9	G	G - ECM - Constant Torque Motor - 300 - 600
		D	D - ECM - Constant Torque Motor - 800 - 1200
Revision (Minor)	10	B	B - Revision B
Sound Attenuation	11	A	A - Standard Quiet Construction
		C	C - Standard Quiet Construction with Vibration Isolator Pad
Cabinet Height & Material	12	L	L - 89 inch tall - Galvanized
		M	M - 93 inch tall - Galvanized
		N	N - 89 inch tall - Paint Grip
		P	P - 93 inch tall - Paint Grip
		Z	Z - Special customer defined cabinet height - (Special Engineering Request is required)

Category	Position		Option Digit and Description
TRU Ventilation	13	1	1 - 35 CFM (constant) / 150 CFM (intermittent) TRU Ventilation Rate
		2	2 - 50 CFM (constant) / 150 CFM (intermittent) TRU Ventilation Rate
		3	3 - 70 CFM (constant) / 150 CFM (intermittent) TRU Ventilation Rate
		4	4 - 90 CFM (constant) / 150 CFM (intermittent) TRU Ventilation Rate
		5	5 - 25 CFM (constant) / 100 CFM (intermittent) TRU Ventilation Rate
		6	6 - 35 CFM (constant) / 100 CFM (intermittent) TRU Ventilation Rate
		7	7 - 50 CFM (constant) / 100 CFM (intermittent) TRU Ventilation Rate
		8	8 - 70 CFM (constant) / 100 CFM (intermittent) TRU Ventilation Rate
TRU Voltage	14	A	A - TRU Voltage: 115-60-1
Fan Control	15	A	A - Fan wiring - Single speed
		C	C - Fan wiring - Single speed with 3-speed fan switch
		H	H - Fan wiring - Three speed
		J	J - Fan wiring - Three speed with Ultra-low airflow
		K	K - DDC Wall Sensor
		Z	Z - Special fan control wiring scheme - (Special Engineering Request is required)
Supply Air Discharge	16	1	1 - 1 Supply Air Outlet
		2	2 - 2 Supply Air Outlets
		3	3 - 3 Supply Air Outlets
		P	P - Knockout - all sides
		Z	Z - Special Supply Air Discharge Configuration - (Special Engineering Request is required)
Cabinet Protection	17	X	X - No SA / RA covers installed
		A	A - Return Air Opening Cover
		B	B - Supply Air Opening Cover
		C	C - Supply & Return Air Opening Cover
		D	D - All Openings Shrink Wrapped
Power Termination / Entry Location	18	X	X - Side Entry - Single Point Power: without unit disconnect
		A	A - Side Entry - Single Point Power: Unfused unit disconnect
		B	B - Side Entry - Single Point Power: Unit circuit breaker (Fused disconnect to protect unit only)
		C	C - Side Entry - Dual Point Power: Unfused unit disconnect on both circuit
		D	D - Side Entry - Dual Point Power: Unit circuit breaker on both circuits

Category	Position		Option Digit and Description
Thermostat Extension	19	A	A - Unit mounted thermostat
		B	B - T-stat Extension w/plug for offset mounting - 5 ft
		C	C - T-stat Extension w/plug for offset mounting - 10 ft
		D	D - T-stat Extension w/plug for offset mounting - 20 ft
		E	E - T-stat Extension w/plug for offset mounting - 30 ft
		F	F - T-stat Extension w/plug for offset mounting - 40 ft
		G	G - T-stat Extension w/plug for offset mounting - 50 ft
		P	P - Panel Mount Thermostat / Wall Sensor
		3	3 - Factory Wired Remote Thermostat (Secondary Unit) - Right Side
		4	4 - Factory Wired Remote Thermostat (Secondary Unit) - Left Side
		5	5 - Factory Wired Remote Thermostat (Secondary Unit) - Top
		6	6 - Factory Wired Remote Thermostat - Front
		7	7 - Factory Wired Remote Thermostat - Right Side
		8	8 - Factory Wired Remote Thermostat - Left Side
		9	9 - Factory Wired Remote Thermostat - Top
		Z	Z - Special Thermostat Extension - (Special Engineering Request is required)
Control Type	20	A	A - 24v / 40VA Transformer only - No fan relays
DDC Control	21	X	X - No DDC control package installed
		A	A - Whalen DDC Control (IO Zone 583) with current switch
		B	B - Whalen DDC Control (IO Zone 583) no current switch
		C	C - Customer Supplied DDC with 2-way valve
		D	D - Customer Supplied DDC with 3-way valve
		E	E - Customer supply: Discharge air sensor
		F	F - Larger Control Box for Customer Supplied DDC Controller
		Z	Z - Special DDC Option - (Special Engineering Request is required)
Drain Pan Options	22	A	A - Standard Stainless Steel P-trap Drain Pan
		B	B - Standard Stainless Steel P-trap Drain Pan with Condensate Safety Switch
		C	C - Standard Stainless Steel P-trap Drain Pan with Condensate Pump
		D	D - Standard Stainless Steel P-trap Drain Pan with Condensate Safety Switch and Condensate Pump
		E	E - Standard Stainless Steel P-trap Drain Pan with Insulated Drain Pan
		F	F - Standard Stainless Steel P-trap Drain Pan with Insulated Drain Pan and Condensate Safety Switch
		G	G - Standard Stainless Steel P-trap Drain Pan with Insulated Drain Pan and Condensate Pump
		H	H - Standard Stainless Steel P-trap Drain Pan with Insulated Drain Pan, Condensate Safety Switch, and Condensate
		Z	Z - Special Drain Pan Configuration - (Special Engineering Request is required)

Category	Position		Option Digit and Description
Insulation Option	23	A	A - 1/2" thick fiberglass insulation
		B	B - 1/2" thick Foil Face fiberglass insulation - Entire Unit
		C	C - 1/2" thick Closed Cell insulation - Entire Unit
		D	D - 1" thick fiberglass insulation in top of unit for sound reduction - 1/2" thick fiberglass in bottom of unit
Outdoor Air	24	1	1 - Inteli-therm Top Connections
Filtration	25	X	X - Field installed / field furnished 1" thick air filters
		A	A - 1" MERV 4 Throwaway
		B	B - 1" MERV 8 Throwaway
		C	C - 1" MERV 11 Throwaway
		D	D - 1" MERV 13 Throwaway
		E	E - 2" MERV 4 Throwaway
		F	F - 2" MERV 8 Throwaway
		G	G - 2" MERV 11 Throwaway
		H	H - 2" MERV 13 Throwaway
		J	J - Aluminum
Riser Style	26	A	A - Factory Supplied / Unit mounted risers with riser cover (Risers configured separate)
		B	B - Factory Supplied / Unit mounted risers without riser cover (Risers configured separate)
		C	C - Factory Supplied / Unit mounted primary riser with riser cover (Risers configured separate)
		D	D - Factory Supplied / Unit mounted primary riser without riser cover (Risers configured separate)
		E	E - Factory Supplied / Unit mounted secondary riser with condensate riser (Risers configured separate)
		F	F - Factory Supplied / Shipped Separate - Coil Pack shipped separate (Risers configured separate)
		M	M - Factory Supplied / Shipped Separate (Risers configured separate)
		Q	Q - Factory Supplied / Shipped Separate - Knockouts - all sides (Risers configured separate)
		R	R - Field Supplied Risers - Coil Pack shipped separate
		S	S - Field Supplied Risers - Knockouts - all sides
		X	X - Field Supplied Risers / None / Secondary unit with no risers or condensate
		Z	Z - Special Riser Location - (Special Engineering Request is required)

Category	Position		Option Digit and Description
Riser Spacing	27	A	A - Standard Spacing
		B	B - Standard spacing with Bulls-Eye Stand-off
		C	C - Standard spacing with 4” x 4” (W x H) Riser Opening
		D	D - Standard spacing with 7” x 4” (W x H) Riser Opening
		F	F - Extended Spacing
		G	G - Extended spacing with Bulls-Eye Stand-off
		H	H - Extended spacing with 4” x 4” (W x H) Riser Opening
		J	J - Extended spacing with 8” x 4” (W x H) Riser Opening
		L	L - Split Spacing
		M	M - Split spacing with Bulls-Eye Stand-off
		N	N - Split spacing with 4” x 4” (W x H) Riser Opening
		P	P - Split spacing with 7” x 4” (W x H) Riser Opening
		S	S - Bulls-Eye Stand-off for Cast-in Firestop Device - Up to 2” Max Riser
		T	T - Bulls-Eye Stand-off for Cast-in Firestop Device - 3” Max Riser
		U	U - Bulls-Eye Stand-off for Cast-in Firestop Device - 4” Max Riser
		Z	Z - Special Riser Spacing / Configuration - (Special Engineering Request is required)
Riser Location	28	1	1 - Factory Supplied - Unit mounted risers
		2	2 - Factory Supplied - Shipped Separate
		X	X - None / Field Supplied Risers
		Z	Z - Special Riser Location - (Special Engineering Request is required)
Shipping	29	1	1 - Ship Coil Pack Separate
		2	2 - Ship Coil Pack in Cabinet
Shipping	30	X	X - Future

Chassis Nomenclature

Category	Position	Position	Option Digit and Description
Product Family	1	B	B - Whalen Fan Coil Chassis
Unit Capacity	2,3	03	03 - 300 CFM (0.75-ton)
		04	04 - 400 CFM (1.0-ton)
		06	06 - 600 CFM (1.5-ton)
		08	08 - 800 CFM (2.0-ton)
		10	10 - 1000 CFM (2.5-ton)
		12	12 - 1200 CFM (3.0-ton)
System Configuration	4	2	2 - 2-pipe Heating or Cooling
		4	4 - 4-pipe Heating & Cooling
		C	C - Cooling Only
		H	H - Heating Only
Coil Package Configuration	5,6	20	20 - 2 Row Cooling Only
		21	21 - 2 Row Cooling & 1 Row Heating
		22	22 - 2 Row Cooling & 2 Row Heating
		30	30 - 3 Row Cooling Only
		31	31 - 3 Row Cooling & 1 Row Heating
		32	32 - 3 Row Cooling & 2 Row Heating
		40	40 - 4 Row Cooling Only
		41	41 - 4 Row Cooling & 1 Row Heating
		42	42 - 4 Row Cooling & 2 Row Heating
		50	50 - 5 Row Cooling Only
		51	51 - 5 Row Cooling & 1 Row Heating
		60	60 - 6 Row Cooling Only
Revision	7	A	A - 1st Revision
Coil Protection	8	A	A - Standard (Galvanized) Chassis & Galvanized Coil Casing with Copper tube / Aluminum fin
		C	C - Standard (Galvanized) Chassis & Galvanized Coil Casing with Epoxy Coating (E-Coating)
		F	F - Standard (Galvanized) Chassis & Stainless Steel Coil Casing with Copper tube / Aluminum fin
		H	H - Standard (Galvanized) Chassis & Stainless Steel Coil Casing with Epoxy Coating (E-Coating)
Valve Actuator Voltage	9	X	X - No control valve installed
		L	L - 24 VAC

Category	Position	Position	Option Digit and Description
Valve Actuator Operation	10	X	X - No control valve installed
		1	1 - 2-Pipe Normally Closed
		2	2 - 2-Pipe Normally Open
		3	3 - 2-Pipe Non-spring return
		4	4 - 4-Pipe Normally Closed (CW) / Normally Closed (HW)
		5	5 - 4-Pipe Normally Closed (CW) / Normally Open (HW)
		6	6 - 4-Pipe Normally Open (CW) / Normally Open (HW)
		7	7 - 4-Pipe Normally Open (CW) / Normally Closed (HW)
		8	8 - 4-Pipe Non-spring return (CW) / Non-spring return (HW)
		Z	Z - Special
Control Valve - 2-pipe unit	11	X	X - No control valve installed
		A	A - 2-way valve, on/off, std diff
		B	B - 2-way valve, on/off, 60 psi diff
		C	C - 2-way valve, on/off, 125 psi diff
		D	D - 2-way valve, modulating (proportional 2-10), std diff
		E	E - 2-way valve, modulating (floating point), std diff
		F	F - 2-way valve, modulating (2-10), 60 psi diff
		H	H - Pressure Independent Control Valve
		J	J - 3-way valve, on/off, std diff
		K	K - 3-way valve, on/off, 60 psi diff
		L	L - 3-way valve, on/off, 125 psi diff
		M	M - 3-way valve, modulating (proportional 2-10), std diff
		N	N - 3-way valve, modulating (floating point), std diff
		P	P - 3-way valve, modulating (2-10), 60 psi diff
		Q	Q - 3-way valve, on/off, std diff with manual balancing valve in bypass
		R	R - 3-way valve, on/off, 60 psi diff with manual balancing valve in bypass
		S	S - 3-way valve, on/off, 125 psi diff with manual balancing valve in bypass
		T	T - 3-way valve, modulating (proportional 2-10), std diff with manual balancing valve in bypass
		U	U - 3-way valve, modulating (floating point), std diff with manual balancing valve in bypass
		V	V - 3-way valve, modulating (2-10), 60 psi diff with manual balancing valve in bypass
		W	W - Factory installed valve supplied by customer
Flow Control - 2-pipe unit	12	X	X - No flow control device installed
		C	C - Automatic Flow Valve - Griswold K with PT Ports
		D	D - Automatic Flow Valve - Hays
		E	E - Automatic Flow Valve - Hays with PT Ports
		F	F - Automatic Flow Valve - Flow Design with PT Ports
		H	H - Manual Flow Control Valve
		Q	Q - Pressure Independent Control Valve

Category	Position	Position	Option Digit and Description
Water Flow - 2-pipe unit	13-16	XXXX	XXXX - Manual valve or no flow control device installed
		0063	0063 - 0.63 GPM
		0075	0075 - 0.75 GPM
		0100	0100 - 1.0 GPM
		0113	0113 - 1.13 GPM
		0125	0125 - 1.25 GPM
		0150	0150 - 1.5 GPM
		0163	0163 - 1.63 GPM
		0175	0175 - 1.75 GPM
		0200	0200 - 2.0 GPM
		0225	0225 - 2.25 GPM
		0250	0250 - 2.5 GPM
		0300	0300 - 3.0 GPM
		0325	0325 - 3.25 GPM
		0350	0350 - 3.5 GPM
		0400	0400 - 4.0 GPM
		0450	0450 - 4.5 GPM
		0500	0500 - 5.0 GPM
		0550	0550 - 5.5 GPM
		0600	0600 - 6.0 GPM
		0650	0650 - 6.5 GPM
		0700	0700 - 7.0 GPM
		0750	0750 - 7.5 GPM
		0800	0800 - 8.0 GPM
		0900	0900 - 9.0 GPM
		1000	1000 - 10.0 GPM
Access Ports - 2-pipe	17	X	X - No access ports installed
		A	A - Pressure / Temperature Port (Supply)
		B	B - Pressure / Temperature Port (Return)
		C	C - Pressure / Temperature Port (Supply & Return)
		D	D - Y-strainer
		E	E - Pressure / Temperature Port (Supply) and Y-strainer
		F	F - Pressure / Temperature Port (Return) and Y-strainer
		G	G - Pressure / Temperature Port (Supply & Return) and Y-strainer
		H	H - Y-strainer with blowdown
		J	J - Pressure / Temperature Port (Supply) and Y-strainer with blowdown
		K	K - Pressure / Temperature Port (Return) and Y-strainer with blowdown
		L	L - Pressure / Temperature Port (Supply & Return) and Y-strainer with blowdown

Category	Position	Position	Option Digit and Description
Air Vent - 2-pipe unit	18	X	X - No air vent installed
		A	A - Manual Air Vent
		B	B - Automatic Air Vent
		F	F - Manual Air Vent & Drain Petcock
		G	G - Automatic Air Vent and Drain Petcock
Water Connections	19	C	C - NPSH (Straight)
		J	J - Insta-Lock Connector
Control Valve - 4-pipe	20	X	X - No control valve installed
		A	A - 2-way valve, on/off, std diff
		B	B - 2-way valve, on/off, 60 psi diff
		C	C - 2-way valve, on/off, 125 psi diff
		D	D - 2-way valve, modulating (proportional 2-10), std diff
		E	E - 2-way valve, modulating (floating point), std diff
		F	F - 2-way valve, modulating (0-10), 60 psi diff
		H	H - Pressure Independent Control Valve
		J	J - 3-way valve, on/off, std diff
		K	K - 3-way valve, on/off, 60 psi diff
		L	L - 3-way valve, on/off, 125 psi diff
		M	M - 3-way valve, modulating (proportional 2-10), std diff
		N	N - 3-way valve, modulating (floating point), std diff
		P	P - 3-way valve, modulating (0-10), 60 psi diff
		Q	Q - 3-way valve, on/off, std diff with manual balancing valve in bypass
		R	R - 3-way valve, on/off, 60 psi diff with manual balancing valve in bypass
		S	S - 3-way valve, on/off, 125 psi diff with manual balancing valve in bypass
		T	T - 3-way valve, modulating (proportional 2-10), std diff with manual balancing valve in bypass
		U	U - 3-way valve, modulating (floating point), std diff with manual balancing valve in bypass
		V	V - 3-way valve, modulating (0-10), 60 psi diff with manual balancing valve in bypass
		W	W - Factory installed valve supplied by customer
Flow Control - 4-pipe	21	X	X - No flow control device installed
		C	C - Automatic Flow Valve - Griswold K with PT Ports
		D	D - Automatic Flow Valve - Hays
		E	E - Automatic Flow Valve - Hays with PT Ports
		F	F - Automatic Flow Valve - Flow Design
		H	H - Manual Flow Control Valve
		Q	Q - Pressure Independent Control Valve

Category	Position	Position	Option Digit and Description
Water Flow - 4-pipe	22-25	XXXX	XXXX - Manual valve or no flow control device installed
		0025	0025 - 0.25 GPM
		0033'	0033' - 0.33 GPM
		0050	0050 - 0.5 GPM
		0055	0055 - 0.55 GPM
		0063	0063 - 0.63 GPM
		0075	0075 - 0.75 GPM
		0100	0100 - 1.0 GPM
		0113	0113 - 1.13 GPM
		0125	0125 - 1.25 GPM
		0150	0150 - 1.5 GPM
		0163	0163 - 1.63 GPM
		0175	0175 - 1.75 GPM
		0200	0200 - 2.0 GPM
		0225	0225 - 2.25 GPM
		0250	0250 - 2.5 GPM
		0300	0300 - 3.0 GPM
		0325	0325 - 3.25 GPM
		0350	0350 - 3.5 GPM
		0400	0400 - 4.0 GPM
		0450	0450 - 4.5 GPM
		0500	0500 - 5.0 GPM
		0550	0550 - 5.5 GPM
		0600	0600 - 6.0 GPM
		0650	0650 - 6.5 GPM
Access Ports - 4-pipe	26	X	X - No access ports installed
		A	A - Pressure / Temperature Port (Supply)
		B	B - Pressure / Temperature Port (Return)
		C	C - Pressure / Temperature Port (Supply & Return)
		D	D - Y-strainer
		E	E - Pressure / Temperature Port (Supply) and Y-strainer
		F	F - Pressure / Temperature Port (Return) and Y-strainer
		G	G - Pressure / Temperature Port (Supply & Return) and Y-strainer
		H	H - Y-strainer with blowdown
		J	J - Pressure / Temperature Port (Supply) and Y-strainer with blowdown
		K	K - Pressure / Temperature Port (Return) and Y-strainer with blowdown
		L	L - Pressure / Temperature Port (Supply & Return) and Y-strainer with blowdown
		Z	Z - Special

Category	Position	Position	Option Digit and Description
Air Vent - 4-pipe	27	X	X - No air vent installed
		A	A - Manual Air Vent
		B	B - Automatic Air Vent
		F	F - Manual Air Vent & Drain Petcock
		G	G - Automatic Air Vent and Drain Petcock
Air / Fluid Sensor	28	X	X - No sensors installed
		A	A - Return Air Sensor
		B	B - Supply Air Sensor
		C	C - Return & Supply Air Sensor
Coil height	29	A	A - 12” tall
		B	B - 14” tall
		C	C - 16” tall
		G	G - 24” tall
		J	J - 28” tall
		K	K - 30” tall
		P	P - 19” tall
		Q	Q - 35” tall

Table 1A: AHRI Performance Ratings – ANSI/AHRI Standard 440

3-Row Air Coil with EC Blower Motor						
Whalen Catalog Name	SCFM	GPM	Cooling Capacity			
			Coil Rows	EWT (°F)	TC (Btu/hr)	SC (Btu/hr)
W(N/T)X-03 3-Row ECM	356	2.1	3	45	10,100	7,300
W(N/T)X-04 3-Row ECM	450	3.1	3	45	14,500	9,800
W(N/T)X-06 3-Row ECM	690	4.2	3	45	19,700	14,300
W(N/T)X-08 3-Row ECM	760	5.0	3	45	22,700	16,100
W(N/T)X-10 3-Row ECM	1020	6.8	3	45	33,000	23,500
W(N/T)X-12 3-Row ECM	1133	8.0	3	45	38,700	28,000

4-Row Air Coil with EC Blower Motor						
Whalen Catalog Name	SCFM	GPM	Cooling Capacity			
			Coil Rows	EWT (°F)	TC (Btu/hr)	SC (Btu/hr)
W(N/T)X-03 4-Row ECM	350	2.5	4	45	11,900	7,900
W(N/T)X-04 4-Row ECM	440	3.3	4	45	16,000	10,700
W(N/T)X-06 4-Row ECM	650	4.4	4	45	20,600	14,200
W(N/T)X-08 4-Row ECM	750	5.6	4	45	26,300	18,100
W(N/T)X-10 4-Row ECM	1020	7.3	4	45	35,300	25,000
W(N/T)X-12 4-Row ECM	1133	8.8	4	45	43,200	30,500

Cooling performance ratings based upon 80°F DB, 67°F WB entering air temperature and LWT = 55°F.

Table 1B: Inteli-therm™ Thermal Recovery Unit Efficiency Performance (Enthalpy Core)

Winter			Summer	
Outdoor 32°F DB, 29°F WB			Outdoor 95°F DB, 78°F WB	
Indoor 70°F DB, 58°F WB			Indoor 75°F DB, 63°F WB	
CFM	Apparent Sensible Effectiveness	Total Recovery Efficiency	Apparent Sensible Effectiveness	Total Recovery Efficiency
50	85%	67%	68%	49%

Typical Ventilation System Running Load	
Constant Ventilation Speed	Intermittent Timed High Speed (1)
52 WATTS	98 WATTS

(1) The unit is designed for constant 24/7 ventilation with a timed high-speed washroom exhaust.
The thermal recovery performance shown above applies to the Whalen Whispertherm® product with an integrated TRU.

With The Whalen Company's vertical stack fan coil units, you can choose from multiple system configurations to meet your application.

2-pipe Fan Coil The simplest of configurations, the 2-pipe fan cycle units have one (1) supply and one (1) return riser. The supply riser provides either cold or hot water to the unit depending on the time of year. When the occupied space needs heating or cooling, the fan cycles on and off to provide comfort conditioning to the occupied space.

4-pipe Heating & Cooling Four-pipe heating & cooling units have two (2) supply risers and two (2) return risers. This allows either hot or cold water to enter the unit at any given time. In applications where it is necessary to heat and cool different areas of a building at the same time, due to differences in internal heat loss or heat gains, the four-pipe riser fan coil unit is the best option.

Vertical Stack Fan Coil Options

Constant Torque EC Motor Constant torque ECMs provide 5 available motor speed settings and will maintain a constant motor torque as external static pressure in the system increases. As the system static pressure increases, reduction in fan airflow with a constant torque ECM is minor.

Supply Air Grille Diffusers are constructed of aluminum with a mill finish or an optional painted finish, available in three variations: single deflection, double deflection, double deflection with opposed blade damper. Damper blades are positioned vertically and adjust easily for directing the unit discharge air.

Flush Mounted Panel Constructed of heavy gauge steel, lined with insulation to help attenuate sound from the compressor and fan assembly. Magnetic clips ensure the panel doors stay closed during operation. Panel has 2 doors to access the chassis and to access the TRU. Panel is painted appliance white and contains a supply air grille for front supply units.

Unfused disconnect Units are available with an optional non-fused disconnect switch, located on the unit front behind the return air panel. On single point power (115V) models, the disconnect switch is used to break power to the unit and energy recovery module for safety and ease of service. On dual point power (208/230V and 265V) models, the disconnect switch is used to break power to the unit only.

Circuit breaker Units are available with an optional circuit breaker. On single point power (115V) models, the circuit breaker is used to provide overcurrent protection and to break power to the unit and energy recovery module for safety and ease of service. On dual point power (208/230V and 265V) models, the circuit breaker is used to provide overcurrent protection and to break power to the unit only.

T-stat extension Low voltage wire harness ranging from 5 to 50 foot ending with 9-Pin Molex quick connector are available and will exit the cabinet on the top.

Condensate overflow The switch is designed to sense when condensate water levels in the drain pan become excessively high. When high condensate water levels are detected, the unit cooling operation is shut down to prevent additional condensation entering the drain pan while the Energy Recovery Module continues to operate.

Condensate pump The internal condensate pump allows the unit to be located virtually wherever desired. The internal condensate pump serves as an effective means for disposing of condensate generated during cooling operation. A condensate pump should be designed and installed at the unit to pump condensate to a building drain.

Vibration isolation pad Vibration isolator pads dampen vibration from the fan motor. The ½" thick neoprene isolation pads are attached to the bottom of the cabinet at the factory eliminating any additional field labor.

Hot Water Coil Available on 4-pipe units only, these coils are available to provide heating in a 4-pipe system configuration.

3-way valve Available on 2-pipe and 4-pipe heating and cooling coils, these 1/2" valves are normally closed to the coil as standard and will isolate the coil during a loss of power. Normally open configurations are simply achieved by turning the valve around. Upon response to a signal from the controller, the valve will be either fully open allowing full flow to the coil or fully closed to the coil diverting full flow to the bypass line.

Automatic flow control The automatic flow control device includes a ball valve cast in the valve body and is located on the return water pipe. The flow control valve consists of a stainless steel/brass flow cartridge and a contoured orifice plate. As the pressure drop increases, the flow cartridge will move into the contoured orifice plate to decrease the flow. This flexing action provides a constant flow, independent

of pressure (2-80 psi), makes it difficult to clog and resistant to cavitation damage. This valve sets flow through the coil without any action required by a system balancer.

Manual flow control A manual flow control valve, acts as both a flow setting device and a stop valve, taking the place of a ball valve. This valve allows water flow through the unit and can be set quickly and accurately.

Filter Units come standard with a MERV 4 one-inch glass fiber throwaway filter. High efficiency MERV 8, MERV 11 and MERV 13 throw away filters as well as a washable aluminum mesh filter are also available as an option.

Air vents Optional air vents are available for installation in each riser to vent incidental air trapped within the riser. Air vents are available in various configurations including: manual, manual piped to drain, manual piped to drain with a ball valve, or automatic.

Features & Benefits of the Energy Recovery Module

Integrated Energy Recovery Module The unit shall include an Integrated Energy Recovery Module with access to the module through the return panel. The module shall be self-contained and including all items needed for a fully functioning engineered unit. Unit to include controls to ensure dedicated constant ventilation and optional high speed exhaust.

FreshPath™ Technology Industry exclusive system ensures fresh air is pre-treated, filtered (TRU prefilter and then the main unit filter) and conditioned before entering the occupied space.

May Assist in Additional LEED® Points The Whispertherm™ unit may allow for additional points based on ventilation and IAQ.

Improves Indoor Air Quality (IAQ) Providing the living space with dedicated tempered ventilation air enhancing personal comfort. Choose between Sensible or Total Enthalpy models to meet the need of your project requirements.

Multiple Ventilation Rate Settings Factory preset ventilation CFM settings based on the living space size.

"Polar Shield" & Defrost Cycle Included sensors protect freezing air from reaching the unit and/or the space. The outdoor air duct is closed-off and the TRU supply fan is de-energized. The TRU exhaust fan continues to operate, circulating recovery air from the washroom, until permitted operating conditions are reached.

MERV6 filters Standard filters are MERV6 filters.

Occupant (Washroom) Timers The timer allows for activation of timed high speed exhaust, eliminating excess humidity build up and/or odors from the recovery space. Additional timers are available based on the project or code requirements.

Table 2: Inteli-therm™ Vertical Stack Fan Coil Thermostats for Standalone Operation

							
Feature		**TB6575A1000**	**TB8575A1000**	**T180**	**SC700V**	**SC700LV**	**TB7100A1000**
Mounting Style	Electrical Box	•	•	•	•	•	•
	Drywall	•	•	•	•	•	•
Display	Backlit LCD	•	•	•			•
	Temperature & Setpoint	•	•	•			•
	Operating Mode	•	•	•			•
	Fan Status	•	•	•			•
	Remote Setback	•	•	•			•
Operation	Non-programmable	•	•		•	•	
	Programmable			7 day			7 day
	Sensing	Local or Remote	Local or Remote	Local or Remote	Local or Remote	Local or Remote	Local or Remote
	Setpoint Range	50ºF to 90ºF	50ºF to 90ºF	50ºF to 90ºF	50ºF to 90ºF	50ºF to 90ºF	50ºF to 90ºF
Changeover	Manual	•	•				•
	Automatic	•		•	•	•	•
Operating Modes	Heating and Cooling				•	•	•
	Heating or Cooling	•	•	•			
	Fan Only Operation	•	•	•			•
	Fan Speeds	3	3	3	3	3	3
Stages	Heating	1	1	1	1	1	2
	Cooling	1	1	1	24 VAC	24 VAC	1
Voltage	Operating Voltage	120 - 240 VAC	20 - 30 VAC	24 VAC, 110 - 277 VAC	110 - 277 VAC	24 VAC	20 - 30 VAC
	Room Temperature	•	•	•	•	•	•
Application	2-Pipe	•	•	•	•	•	•
	4-Pipe	•	•	•	•	•	•

The Whalen Company fan coils are available with a factory installed multi-protocol communication module that is designed to communicate with a building automation system (BAS). The I/O Zone 583 DDC controller is designed to allow the integration of Whalen fan coil equipment into DDC systems. The I/O Zone 583 DDC controller has the ability to communicate through a choice of three widely used protocols: BACnet MS/TP, Johnson Controls N2, and Modbus. The protocol of choice for the particular system is selected by simply configuring DIP switches on the DDC control. This flexibility allows one controller to be used in a multitude of buildings which use any of these three common protocols. The control serves as a node of information processing between the Whalen fan coil and the DDC network. The I/O Zone 583 DDC controller is available for applications with modulating valves / fans requiring 0-10 VDC output.

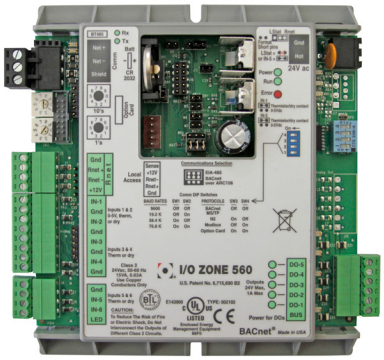

Features & Benefits

- Multi-Protocol communications provides DDC system flexibility.
- Supports native BACnet MS/TP communications – the ASHRAE standard protocol for interoperability.
- Supports Johnson Controls N2 communications – for integration into Johnson Controls Metasys DDC systems.
- Supports Modbus communications for integration into Modbus DDC networks.
- Four baud rate levels offer flexible communications speeds of 9600, 19.2k, 38.4k, or 76.8k baud. Enables building operators to easily upgrade firmware in the future.
- Removable field wiring connectors for ease of field service.
- Three (3) analog outputs and five (5) digital outputs.
- Six (6) inputs. Hardware specs change slightly for I/O Zone 583. Main differences are number of Inputs and Outputs.
- Stand-alone or BAS integrated operational modes.

Hardware Specification *(Hardware specs change slightly for I/O Zone 583. Main differences are number of Inputs and Outputs.)*

Power:	24Vac +-10%, 50 or 60Hz, 18VA power consumption, 26Vdc, Single Class 2 source only, 100 VA or less.
Physical size:	5-1/16" [129mm] width x 5-11/16" [144mm] height x 1-1/2" [38mm] (minimum panel depth).
Housing material:	Rugged GE C2905HG Cycoloy plastic housing – complies with UL 94 V-O.
Environmental:	0 to 130 degrees F, 10% to 95% non-condensing.
Protection:	Built-in surge transient protection circuitry. Module protected by Internal solid state Polyswitches on incoming power and network connections.
Digital Outputs:	5 digital outputs, relay contacts rated at 1 A resistive @ 24 Vac, configured as dry contact, normally open.
Universal inputs:	6 universal inputs. Inputs 1-6 configurable as thermistor or dry contact; inputs 1 and 2 also configurable as 0-5 Vdc type inputs.
Communication ports:	*Port 1:* Jumper configurable for ARCNET or EIA-485 communication. In ARCNET mode, the port speaks BACnet (at 156k bps). In EIA-485 mode, the communication protocol and baud rate desired are DIP switch selectable between BACnet MS/TP, Modbus RTU, or N2. *Rnet port:* Interface with a BACview5, BACview6 , RS sensors, or local laptop.
Optional card port:	LonWorks Option Card for connection to Free Topology LON networks (TP/FT-10 Channel).

Table 3: Physical Data Table

Component	Models					
	W(N/T)X-03	W(N/T)X-04	W(N/T)X-06	W(N/T)X-08	W(N/T)X-10	W(N/T)X-12
Nominal Tonnage	**0.75**	**1**	**1.5**	**2**	**2.5**	**3**
3-ROW COOLING PERFORMANCE						
Rated Airflow (CFM)	300	400	600	800	1000	1200
Entering Air Temp DB / WB (°F)	80 / 67	80 / 67	80 / 67	80 / 67	80 / 67	80 / 67
Total Cooling (MBTUH)	10.3	15.3	20.3	24.6	30.5	36.7
Sensible Cooling (MBTUH)	8.4	11.9	14.8	19.7	24.2	29.1
Entering Water Temp (°F)	45	45	45	45	45	45
Temp Rise (°F)	10	10	10	10	10	10
Pressure Drop (ft. wg.)	18.6	25.8	14.9	20.5	18.8	16.2
3-ROW HEATING PERFORMANCE						
Heating Capacity (MBTUH)	8.5	18.2	24.2	30.5	42.3	49.5
Entering Air Temp DB (°F)	70	70	70	70	70	70
Entering Water Temp (°F)	120	120	120	120	120	120
Temp Rise (°F)	15	15	15	15	15	15
Pressure Drop (ft. wg.)	11.1	13.5	8.9	12.3	14.9	12.1
DIMENSIONS (inches)						
Width (in.)	21	21	21	21	21	21
Depth (in.)	28	28	28	28	29	29
Height (in.)	89	89	89	89	97	97
OPERATING WEIGHT (lbs.)						
Cabinet	260	260	260	260	290	290
Coil Pack - 3-Row Coil	25	25	43	43	58	58
Coil Pack - 4-Row Coil	30	30	48	48	63	63
SHIPPING WEIGHT (lbs.)						
Cabinet	272	272	272	272	302	302
Coil Pack - 3-Row Coil	14	20	26	33	50	56
Coil Pack - 4-Row Coil	19	25	31	38	55	61
WATER COIL DATA						
Cooling Coil (rows)	3, 4, 5	3, 4, 5	3, 4, 5	3, 4, 5	3, 4, 5	3, 4, 5
Heating Coil (rows)	0, 1, 2	0, 1, 2	0, 1, 2	0, 1, 2	0, 1, 2	0, 1, 2
SUPPLY FAN DATA						
Quantity	1	1	1	1	1	1
Fan Size (D x W)	7.62 x 5	8 x 5	8.5 x 7	9 x 8	9 x 4.8	9 x 5.6
Fan type	Centrifugal	Centrifugal	Centrifugal	Centrifugal	Centrifugal	Centrifugal
Maximum E.S.P.						
ECM Motor	0.25	0.40	0.45	0.50	0.50	0.60
Constant Torque ECM MOTOR HP						
Voltage - 115/60/1	1/4	1/4	1/4	1/2	1/2	1/2
Voltage - 208-230/60/1	1/4	1/4	1/4	1/2	1/2	1/2
Voltage - 265/60/1	1/4	1/4	1/4	1/2	1/2	1/2
ACOUSTICAL RETURN AIR PANEL						
Chassis Accessible Flush Mounted	27 x 81	27 x 81	27 x 81	27 x 81	27 x 90	27 x 90
SUPPLY GRILLE						
1 Grille (W x H)	14 x 8	14 x 10	16 x 12	16 x 16	16 x 16	16 x 16
2 Grille (W x H)	14 x 6	14 x 6	16 x 6	16 x 8	16 x 8 &	16 x 8 &
Top Duct (W x H)	12 x 10	12 x 12	14 x 14	14 x 16	16 x 16	16 x 16
FILTERS						
Size (in.)	13 x 24 1	13 x 24 x 1	15 x 28 x 1	15 x 28 x 1	21 x 36 x 1	21 x 36 x 1
Quantity	1	1	1	1	1	1

Standard Range Units:

Units are designed to start in an ambient of 50°F (10°C) with entering air at 50°F (10°C), with entering water at 50°F (10°C), with nominal air flow and water flow (3.0 GPM/Ton), for initial start-up in heating and cooling mode.

Note: This is not a normal or continuous operating condition. It is assumed that such start-up is for the purpose of bringing the building space up to occupancy temperature and operating for extended periods of time.

Environment

This equipment is designed for indoor installation only. Unconditioned locations such as attics, garages, etc., generally will not provide sufficient protection against extremes in temperature and/or humidity, and equipment performance, reliability, and service life may be adversely affected.

Table 4: Unit Voltage Limitations

Voltage	Minimum	Maximum
115-60-1	104	127
208/230-60-1	197	252
265-60-1	239	292

Table 5: W(N/T)X Continuous Operating Limits

Mode	Entering Fluid °F			
	2-Pipe		4-Pipe	
	Min	Max	Min	Max
Cooling	40	50	40	50
Heating	120	150	130	180

Table 6: W(N/T)X Start-up Operating Limits

Mode	Entering Fluid °F			
	2-Pipe		4-Pipe	
	Min	Max	Min	Max
Cooling	40	65	40	65
Heating	85	150	85	180

Power supply

A voltage variation of +/-10% of nameplate voltage is acceptable.

W(N/T)X 2P/4P Cooling Performance Data - 4 Row

Size	EWT (°F)	Delta T (°F)	Cooling Performance - 80°F / 67°F				Cooling Performance - 78°F / 65°F				Cooling Performance - 75°F / 63°F			
			Total Capacity	Sensible Capacity	GPM	Pressure Drop (Ft)	Total Capacity	Sensible Capacity	GPM	Pressure Drop (Ft)	Total Capacity	Sensible Capacity	GPM	Pressure Drop (Ft)
W(N/T)X-03	45	10	13.8	10.1	2.8	22.9	12.5	9.5	2.5	19.2	10.6	8.4	2.1	14.2
		12	12.7	9.6	2.1	14.0	11.5	9.0	1.9	11.8	9.8	8.0	1.6	8.8
		14	11.6	9.1	1.7	9.1	10.6	8.5	1.5	7.7	9.0	7.6	1.3	5.7
		16	10.7	8.6	1.3	6.2	9.7	8.1	1.2	5.3	8.2	7.2	1.0	3.9
W(N/T)X-04	45	10	16.5	11.2	3.3	12.0	15.0	10.5	3.0	10.0	12.7	9.3	2.5	7.4
		12	14.8	10.5	2.5	7.0	13.4	9.8	2.2	5.9	11.4	8.7	1.9	4.4
		14	13.4	10.0	1.9	4.4	12.1	9.4	1.7	3.7	10.3	8.3	1.5	2.8
		16	12.2	9.7	1.5	2.9	11.1	9.1	1.4	2.5	9.4	8.0	1.2	1.9
W(N/T)X-06	45	10	22.0	15.4	4.4	15.5	20.0	14.4	4.0	12.8	16.9	12.8	3.4	9.2
		12	20.1	14.7	3.4	9.1	18.3	13.8	3.0	7.5	15.5	12.3	2.6	5.5
		14	17.9	13.9	2.6	5.4	16.3	13.0	2.3	4.5	13.8	11.6	2.0	3.3
		16	15.4	12.8	1.9	3.2	13.9	12.0	1.7	2.7	11.8	10.7	1.5	2.0
W(N/T)X-08	45	10	29.2	21.5	5.8	25.6	27.1	20.0	5.4	22.1	23.8	17.3	4.7	17.3
		12	27.4	20.8	4.5	16.0	25.4	19.3	4.2	13.9	22.3	16.7	3.7	10.9
		14	25.8	20.1	3.7	10.7	23.9	18.7	3.4	9.3	20.9	16.2	3.0	7.4
		16	24.3	19.4	3.0	7.6	22.5	18.1	2.8	6.6	19.8	15.6	2.5	5.3
W(N/T)X-10	45	10	36.7	26.7	7.3	16.0	34.0	24.8	6.8	13.9	29.8	21.5	5.9	10.8
		12	34.0	25.5	5.6	9.9	31.5	23.7	5.2	8.5	27.7	20.6	4.6	6.7
		14	31.6	24.4	4.5	6.4	29.3	22.7	4.2	5.5	25.7	19.6	3.7	4.3
		16	29.4	23.3	3.7	4.3	27.2	21.7	3.4	3.8	23.9	18.8	3.0	2.9
W(N/T)X-12	45	10	44.9	32.4	8.9	26.9	41.6	30.1	8.3	23.3	36.5	26.1	7.3	18.2
		12	41.9	31.0	6.9	16.7	38.8	28.9	6.4	14.5	34.1	25.0	5.7	11.3
		14	39.1	29.8	5.6	11.0	36.2	27.7	5.1	9.5	31.8	24.0	4.5	7.5
		16	36.5	28.5	4.5	7.5	33.8	26.5	4.2	6.5	29.7	23.0	3.7	5.1

W(N/T)X 2P Heating Performance Data - 4 Row

Size	EWT (°F)	Delta T (°F)	Heating Entering Air - 65°F			Heating Entering Air - 70°F			Heating Entering Air - 75°F		
			Total Capacity	GPM	Pressure Drop (Ft)	Total Capacity	GPM	Pressure Drop (Ft)	Total Capacity	GPM	Pressure Drop (Ft)
W(N/T)X-03	140	15	25.5	3.4	29.2	23.0	3.1	24.0	20.5	2.7	19.4
		20	23.9	2.4	15.3	21.5	2.2	12.6	19.2	1.9	10.2
		25	22.1	1.8	8.9	19.9	1.6	7.3	17.7	1.4	6.0
		30	20.0	1.3	5.4	18.0	1.2	4.5	16.1	1.1	3.6
W(N/T)X-04	140	15	28.8	3.8	13.8	25.9	3.5	11.4	23.1	3.1	9.2
		20	27.7	2.8	7.6	24.9	2.5	6.2	22.2	2.2	5.0
		25	26.3	2.1	4.6	23.7	1.9	3.8	21.1	1.7	3.1
		30	24.6	1.6	2.9	22.1	1.5	2.4	19.7	1.3	2.0
W(N/T)X-06	140	15	44.6	5.9	24.3	40.1	5.3	19.7	35.7	4.8	15.7
		20	42.6	4.3	12.6	38.3	3.8	10.2	34.1	3.4	8.2
		25	40.0	3.2	7.2	36.0	2.9	5.9	32.1	2.6	4.7
		30	36.8	2.5	4.3	33.1	2.2	3.6	29.5	2.0	2.9
W(N/T)X-08	140	15	59.6	8.1	41.8	53.7	7.3	34.1	47.8	6.5	27.2
		20	56.2	5.7	21.4	50.5	5.1	17.5	45.0	4.6	14.0
		25	52.0	4.2	12.1	46.8	3.8	10.0	41.7	3.4	8.1
		30	47.3	3.2	7.3	42.6	2.9	6.0	37.9	2.6	4.9
W(N/T)X-10	140	15	72.3	9.8	24.5	65.1	8.8	20.0	58.0	7.8	16.0
		20	68.5	7.0	12.7	61.6	6.3	10.4	54.9	5.6	8.3
		25	63.7	5.2	7.2	57.3	4.7	5.9	51.0	4.1	4.8
		30	57.9	3.9	4.3	52.1	3.5	3.5	46.4	3.1	2.8
W(N/T)X-12	140	15	86.8	11.7	39.5	78.1	10.6	32.2	69.5	9.4	25.8
		20	82.4	8.4	20.6	74.2	7.5	16.9	66.1	6.7	13.6
		25	77.0	6.3	11.9	69.3	5.6	9.8	61.7	5.0	7.9
		30	70.6	4.8	7.2	63.6	4.3	5.9	56.6	3.8	4.8

W(N/T)X 4P Heating Performance Data - 1 Row

Size	EWT	Delta T	Heating Entering Air - 65°F			Heating Entering Air - 70°F			Heating Entering Air - 75°F		
	(°F)	(°F)	Total Capacity	GPM	Pressure Drop (Ft)	Total Capacity	GPM	Pressure Drop (Ft)	Total Capacity	GPM	Pressure Drop (Ft)
W(N/T)X-03	150	20	17.6	1.8	8.7	16.4	1.6	7.6	15.3	1.5	6.7
		30	15.4	1.0	3.3	14.3	1.0	2.9	13.3	0.9	2.6
		40	12.9	0.6	1.5	12.0	0.6	1.3	11.2	0.6	1.1
		50	10.3	0.4	0.6	9.5	0.4	0.5	8.9	0.4	0.4
W(N/T)X-04	150	20	24.5	2.4	5.9	22.7	2.3	5.2	21.2	2.1	4.6
		30	21.7	1.4	2.3	20.2	1.3	2.0	18.8	1.3	1.8
		40	18.7	0.9	1.1	17.4	0.9	1.0	16.2	0.8	0.8
		50	15.5	0.6	0.5	14.4	0.6	0.5	13.4	0.5	0.4
W(N/T)X-06	150	20	30.0	3.0	6.3	27.8	2.8	5.4	25.9	2.6	4.7
		30	25.8	1.7	2.2	23.9	1.6	2.0	22.3	1.5	1.8
		40	21.2	1.1	1.0	19.7	1.0	0.9	18.3	0.9	0.9
		50	16.2	0.6	0.6	15.0	0.6	0.6	14.0	0.6	0.5
W(N/T)X-08	150	20	45.8	4.7	31.4	42.5	4.3	27.3	39.6	4.0	23.9
		30	40.1	2.7	11.6	37.2	2.5	10.1	34.7	2.4	8.9
		40	33.9	1.7	5.1	31.4	1.6	4.4	29.3	1.5	3.9
		50	27.2	1.1	2.3	25.2	1.0	2.0	23.5	1.0	1.8
W(N/T)X-10	150	20	50.5	5.1	45.2	46.9	4.8	39.7	43.7	4.4	35.2
		30	45.0	3.1	18.7	41.8	2.8	16.5	38.9	2.6	14.7
		40	39.0	2.0	9.2	36.2	1.8	8.2	33.7	1.7	7.3
		50	32.4	1.3	4.7	30.1	1.2	4.2	28.0	1.1	3.7
W(N/T)X-12	150	20	60.5	6.2	76.1	56.1	5.7	66.0	52.3	5.3	57.8
		30	54.1	3.7	28.8	50.2	3.4	25.1	46.8	3.2	22.1
		40	47.0	2.4	13.2	43.6	2.2	11.5	40.7	2.1	10.2
		50	39.3	1.6	6.5	36.5	1.5	5.7	34.0	1.4	5.0

W(N/T)X 4P Heating Performance Data - 2 row

Size	EWT	Delta T	Heating Entering Air - 65°F			Heating Entering Air - 70°F			Heating Entering Air - 75°F		
	(°F)	(°F)	Total Capacity	GPM	Pressure Drop (Ft)	Total Capacity	GPM	Pressure Drop (Ft)	Total Capacity	GPM	Pressure Drop (Ft)
W(N/T)X-03	150	20	17.6	1.8	8.7	16.4	1.6	7.6	15.3	1.5	6.7
		30	15.4	1.0	3.3	14.3	1.0	2.9	13.3	0.9	2.6
		40	12.9	0.6	1.5	12.0	0.6	1.3	11.2	0.6	1.1
		50	10.3	0.4	0.6	9.5	0.4	0.5	8.9	0.4	0.4
W(N/T)X-04	150	20	24.5	2.4	5.9	22.7	2.3	5.2	21.2	2.1	4.6
		30	21.7	1.4	2.3	20.2	1.3	2.0	18.8	1.3	1.8
		40	18.7	0.9	1.1	17.4	0.9	1.0	16.2	0.8	0.8
		50	15.5	0.6	0.5	14.4	0.6	0.5	13.4	0.5	0.4
W(N/T)X-06	150	20	30.0	3.0	6.3	27.8	2.8	5.4	25.9	2.6	4.7
		30	25.8	1.7	2.2	23.9	1.6	2.0	22.3	1.5	1.8
		40	21.2	1.1	1.0	19.7	1.0	0.9	18.3	0.9	0.9
		50	16.2	0.6	0.6	15.0	0.6	0.6	14.0	0.6	0.5
W(N/T)X-08	150	20	45.8	4.7	31.4	42.5	4.3	27.3	39.6	4.0	23.9
		30	40.1	2.7	11.6	37.2	2.5	10.1	34.7	2.4	8.9
		40	33.9	1.7	5.1	31.4	1.6	4.4	29.3	1.5	3.9
		50	27.2	1.1	2.3	25.2	1.0	2.0	23.5	1.0	1.8
W(N/T)X-10	150	20	50.5	5.1	45.2	46.9	4.8	39.7	43.7	4.4	35.2
		30	45.0	3.1	18.7	41.8	2.8	16.5	38.9	2.6	14.7
		40	39.0	2.0	9.2	36.2	1.8	8.2	33.7	1.7	7.3
		50	32.4	1.3	4.7	30.1	1.2	4.2	28.0	1.1	3.7
W(N/T)X-12	150	20	60.5	6.2	76.1	56.1	5.7	66.0	52.3	5.3	57.8
		30	54.1	3.7	28.8	50.2	3.4	25.1	46.8	3.2	22.1
		40	47.0	2.4	13.2	43.6	2.2	11.5	40.7	2.1	10.2
		50	39.3	1.6	6.5	36.5	1.5	5.7	34.0	1.4	5.0

W(N/T)X 2P/4P Cooling Performance Data - 3 Row

Size	EWT (°F)	Delta T (°F)	Cooling Performance - 80°F / 67°F				Cooling Performance - 78°F / 65°F				Cooling Performance - 75°F / 63°F			
			Total Capacity	Sensible Capacity	GPM	Pressure Drop (Ft)	Total Capacity	Sensible Capacity	GPM	Pressure Drop (Ft)	Total Capacity	Sensible Capacity	GPM	Pressure Drop (Ft)
W(N/T)X-03	45	10	10.5	7.7	2.1	8.7	9.5	7.2	1.9	7.3	8.1	6.4	1.6	5.4
		12	9.7	7.3	1.6	5.4	8.8	6.9	1.5	4.5	7.4	6.1	1.2	3.4
		14	8.9	7.0	1.3	3.5	8.1	6.6	1.2	3.0	6.9	5.8	1.0	2.2
		16	8.2	6.6	1.0	2.4	7.5	6.2	0.9	2.1	6.3	5.5	0.8	1.5
W(N/T)X-04	45	10	14.8	10.1	3.0	12.4	13.5	9.5	2.7	10.4	11.4	8.4	2.3	7.8
		12	12.5	9.4	2.1	6.6	11.3	8.8	1.9	5.6	9.6	7.8	1.6	4.3
		14	10.3	8.6	1.5	3.8	9.4	8.0	1.3	3.3	7.9	7.1	1.1	2.5
		16	8.4	7.6	1.1	2.3	7.6	7.1	1.0	2.0	6.5	6.3	0.8	1.6
W(N/T)X-06	45	10	20.5	14.9	4.1	14.8	18.6	14.0	3.7	12.4	15.7	12.4	3.1	9.2
		12	19.2	14.4	3.2	9.4	17.4	13.5	2.9	7.9	14.7	11.9	2.5	5.9
		14	17.1	13.5	2.4	5.9	15.5	12.7	2.2	5.0	13.2	11.3	1.9	3.7
		16	14.3	12.5	1.8	3.4	13.0	11.7	1.6	2.9	11.0	10.4	1.4	2.3
W(N/T)X-08	45	10	24.6	19.7	4.9	19.2	22.3	18.5	4.5	16.2	18.9	16.4	3.8	12.2
		12	22.8	18.9	3.8	12.3	20.7	17.7	3.4	10.4	17.5	15.7	2.9	7.9
		14	21.1	18.1	3.0	8.3	19.2	17.0	2.7	7.0	16.2	15.0	2.3	5.3
		16	19.6	17.2	2.4	5.8	17.8	16.1	2.2	5.0	15.0	14.3	1.9	3.7
W(N/T)X-10	45	10	30.5	24.2	6.1	19.0	27.7	22.8	5.5	15.9	23.5	20.2	4.7	11.7
		12	26.5	22.4	4.4	10.5	24.1	21.0	4.0	8.8	20.4	18.6	3.4	6.5
		14	23.6	20.9	3.4	6.4	21.4	19.7	3.1	5.4	18.2	17.4	2.6	4.0
		16	21.8	19.9	2.7	4.4	19.8	18.7	2.5	3.7	16.8	16.5	2.1	2.7
W(N/T)X-12	45	10	36.7	29.1	7.3	16.3	33.3	27.3	6.7	13.6	28.2	24.2	5.6	9.9
		12	33.5	27.6	5.6	9.7	30.4	25.9	5.1	8.1	25.8	22.9	4.3	5.9
		14	30.5	26.0	4.4	6.1	27.7	24.4	4.0	5.1	23.5	21.6	3.4	3.7
		16	27.8	24.4	3.5	4.0	25.2	22.9	3.2	3.3	21.4	20.3	2.7	2.4

W(N/T)X 2P/4P Heating Performance Data - 3 Row

Size	EWT (°F)	Delta T (°F)	Heating Entering Air - 65°F			Heating Entering Air - 70°F			Heating Entering Air - 75°F		
			Total Capacity	GPM	Pressure Drop (Ft)	Total Capacity	GPM	Pressure Drop (Ft)	Total Capacity	GPM	Pressure Drop (Ft)
W(N/T)X-03	140	15	15.3	2.0	7.1	13.8	1.8	5.9	12.3	1.6	4.8
		20	14.2	1.4	3.7	12.8	1.3	3.1	11.4	1.1	2.5
		25	12.9	1.0	2.1	11.6	0.9	1.8	10.4	0.8	1.5
		30	11.6	0.8	1.3	10.4	0.7	1.1	9.3	0.6	0.9
W(N/T)X-04	140	15	25.5	3.4	13.8	23.0	3.1	11.4	20.5	2.7	9.3
		20	23.0	2.3	6.9	20.7	2.1	5.7	18.4	1.8	4.7
		25	20.3	1.6	3.8	18.3	1.5	3.3	16.3	1.3	2.7
		30	17.7	1.2	2.3	15.9	1.1	2.0	14.2	0.9	1.7
W(N/T)X-06	140	15	42.3	5.6	23.4	38.0	5.1	19.2	33.9	4.5	15.4
		20	39.1	3.9	11.8	35.2	3.5	9.7	31.3	3.1	7.9
		25	35.5	2.8	6.6	32.0	2.6	5.5	28.5	2.3	4.5
		30	31.5	2.1	3.9	28.4	1.9	3.3	25.3	1.7	2.7
W(N/T)X-08	140	15	53.7	7.2	32.5	48.4	6.4	26.9	43.1	5.7	21.9
		20	49.8	5.0	17.0	44.8	4.5	14.2	39.9	4.0	11.6
		25	45.5	3.6	9.9	40.9	3.3	8.3	36.4	2.9	6.8
		30	40.8	2.7	6.0	36.7	2.4	5.1	32.7	2.2	4.2
W(N/T)X-10	140	15	66.3	8.8	32.9	59.6	8.0	27.0	53.1	7.1	21.7
		20	62.0	6.2	17.0	55.8	5.6	14.0	49.7	5.0	11.3
		25	57.2	4.6	9.7	51.5	4.1	8.0	45.8	3.7	6.5
		30	51.7	3.4	5.8	46.5	3.1	4.8	41.4	2.8	3.9
W(N/T)X-12	140	15	78.4	10.4	27.8	70.5	9.4	22.7	62.8	8.4	18.2
		20	73.0	7.3	14.0	65.7	6.6	11.5	58.5	5.9	9.2
		25	66.7	5.3	7.7	60.1	4.8	6.3	53.5	4.3	5.1
		30	59.5	4.0	4.4	53.6	3.6	3.6	47.7	3.2	2.9

Table 7: W(N/T)X Constant Torque ECM Blower Performance Table

Unit	Fan Option		CFM at External Static Pressure (in wg.)										
	Option	Speed	0.00	0.05	0.10	0.15	0.20	0.25	0.30	0.35	0.40	0.45	0.50
W(T/N)X-03 (0.75)	Standard	HI	431	416	401	385	367	348	329	308	286	263	238
		MED HI	397	381	364	345	325	303	280	256	230		
		MED[1]	352	336	316	292	265	235	201				
		MED LO[2]	307	283	256	224	188						
		LOW[3]	250	217	176								
W(T/N)X-04 (1.0)	Standard	HI	533	511	490	468	447	426	405	384	363	342	321
		MED HI	494	471	448	425	402	378	354	330	306	281	256
		MED[1]	452	428	403	377	351	325	298	271	243		
		MED LO[2]	366	338	307	273	237	198					
		LOW[3]	268	225	176								
W(T/N)X-06 (1.5)	Standard	HI	723	701	680	659	639	619	600	582	563	546	528
		MED HI[1]	656	633	609	586	563	539	516	493	470	447	424
		MED	585	556	526	496	465	435	405	374	344		
		MED LO[2]	508	476	442	409	374	339	304				
		LOW[3]	420	384	346	306	264						
W(T/N)X-08 (2.0)	Standard	HI	805	784	764	744	725	707	690	674	658		
		MED HI[1]	772	750	728	707	686	667	649	631	615	599	584
		MED	699	677	655	633	612	591	571	551	531	512	493
		MED LO[2]	601	576	551	527	503	480	457	434	412		
		LOW[3]	496	465	435	407	379	353	328				
W(T/N)-10 (2.5)	Standard	HI	1114	1094	1074	1053	1032	1010	988	966	943	920	896
		MED HI[1]	1049	1027	1005	982	958	934	909	884	858	831	804
		MED	949	928	906	882	858	832	805	776	747	717	685
		MED LO[2]	832	806	778	750	720	690	659	627	594		
		LOW[3]	692	662	629	594	557	517	475				
W(T/N)-12 (3.0)	Standard	HI	1344	1326	1307	1287	1266	1245	1222	1200	1176	1152	1127
		MED HI[1]	1248	1223	1198	1174	1151	1128	1106	1085	1064	1044	1025
		MED	1119	1097	1075	1053	1030	1006	983	958	933	908	882
		MED LO[2]	967	943	918	892	865	837	809	779	748	716	684
		LOW[3]	834	805	775	744	712	679	645	610	575		

Table 8: W(N/T)X Electrical Data – Constant Torque EC Motor

Size (Tons)	Supply Blower Motor			ERV Motors		Single Point Power		Dual Point Power			
	Voltage	FLA	HP	Voltage	Amps	MCA	MOPD	Unit MCA	Unit MOPD	ERV MCA	ERV MOPD
W(N/T)X-03	115/1/60	3.7	1/4	115/1/60	1.6	6.2	15	NA	NA	NA	NA
	208-230/1/60	2.2	1/4	115/1/60	1.6	NA	NA	2.8	15	2.0	15
	265/1/60	2.2	1/4	115/1/60	1.6	NA	NA	2.8	15	2.0	15
W(N/T)X-04	115/1/60	3.7	1/4	115/1/60	1.6	6.2	15	NA	NA	NA	NA
	208-230/1/60	2.2	1/4	115/1/60	1.6	NA	NA	2.8	15	2.0	15
	265/1/60	2.2	1/4	115/1/60	1.6	NA	NA	2.8	15	2.0	15
W(N/T)X-06	115/1/60	3.7	1/4	115/1/60	1.6	6.2	15	NA	NA	NA	NA
	208-230/1/60	2.2	1/4	115/1/60	1.6	NA	NA	2.8	15	2.0	15
	265/1/60	2.2	1/4	115/1/60	1.6	NA	NA	2.8	15	2.0	15
W(N/T)X-08	115/1/60	6.4	1/2	115/1/60	1.6	9.6	15	NA	NA	NA	NA
	208-230/1/60	4.6	1/2	115/1/60	1.6	NA	NA	5.8	15	2.0	15
	265/1/60	3.2	1/2	115/1/60	1.6	NA	NA	4.0	15	2.0	15
W(N/T)X-10	115/1/60	6.4	1/2	115/1/60	1.6	9.6	15	NA	NA	NA	NA
	208-230/1/60	4.6	1/2	115/1/60	1.6	NA	NA	5.8	15	2.0	15
	265/1/60	3.2	1/2	115/1/60	1.6	NA	NA	4.0	15	2.0	15
W(N/T)X-12	115/1/60	6.4	1/2	115/1/60	1.6	9.6	15	NA	NA	NA	NA
	208-230/1/60	4.6	1/2	115/1/60	1.6	NA	NA	5.8	15	2.0	15
	265/1/60	3.2	1/2	115/1/60	1.6	NA	NA	4.0	15	2.0	15

Table 9: Additional Static Resistance

Size (Tons)	Model	Fan Speed	Filter[1]				
			MERV 4 (Fiberglass)	MERV 4 (Poly)	MERV 8	MERV 11	MERV 13
03 (0.75)	W(N/T)X	High	0.06	0.10	0.21	0.21	0.24
		Medium	0.04	0.06	0.15	0.16	0.17
		Low	0.02	0.03	0.09	0.10	0.09
04 (1.0)		High	0.04	0.06	0.14	0.15	0.15
		Medium	0.02	0.03	0.09	0.10	0.10
		Low	0.01	0.02	0.06	0.07	0.06
06 (1.5)		High	0.06	0.09	0.20	0.20	0.22
		Medium	0.04	0.05	0.13	0.14	0.14
		Low	0.02	0.02	0.07	0.08	0.07
08 (2.0)		High	0.06	0.10	0.21	0.21	0.24
		Medium	0.03	0.04	0.11	0.12	0.12
		Low	0.02	0.02	0.07	0.08	0.07
10 (2.5)		High	0.04	0.05	0.13	0.14	0.15
		Medium	0.02	0.03	0.08	0.09	0.09
		Low	0.01	0.02	0.05	0.06	0.05
12 (3.0)		High	0.04	0.06	0.14	0.15	0.15
		Medium	0.02	0.03	0.09	0.10	0.09
		Low	0.01	0.02	0.05	0.06	0.06

1 Deduct these values from the available external static pressure shown in the respective Blower Performance Tables.

Table 10: W(T/N)X Sound Power Levels - 1/2" Fiberglass Acoustic Insulation

Size (Tons)	Model	Sound Rating (dB-A)	Octave Bands (Hz)						
			125	250	500	1000	2000	4000	8000
300	Low	54.1	55.8	49.2	46.6	46.5	47.4	48.3	42.2
	Medium-low	57.5	57.8	51.7	49.6	49.5	50.4	52.3	46.2
	Medium	59.8	59.8	53.7	51.1	51.5	52.9	54.8	49.7
	Medium-high	62.1	61.8	55.7	53.6	53.5	54.9	57.3	52.2
	High	63.5	62.8	56.7	54.6	55.5	56.4	58.3	54.2
400	Low	48.5	52.8	45.2	41.6	41.5	42.4	40.3	37.2
	Medium-low	54.6	56.3	50.7	47.6	47.0	49.4	47.3	38.2
	Medium	59.3	60.8	54.7	51.1	51.0	53.4	53.3	46.7
	Medium-high	61.5	61.8	56.2	52.6	53.0	55.4	55.8	50.7
	High	63.1	63.3	57.2	54.6	55.0	56.4	57.8	52.7
600	Low	55.7	56.8	51.2	47.6	49.0	49.4	49.3	42.2
	Medium-low	60.5	59.8	54.7	52.1	53.5	54.4	54.3	48.7
	Medium	64.8	62.8	67.7	55.6	56.5	56.9	57.8	52.7
	Medium-high	66.2	64.8	60.2	57.6	59.5	59.4	60.3	55.7
	High	68.5	66.8	62.2	60.1	62.5	61.4	62.3	58.2
800	Low	54.1	55.3	50.2	49.6	48.5	46.4	46.8	38.2
	Medium-low	59.2	58.8	54.2	54.1	53.0	51.9	52.8	44.2
	Medium	63.4	61.8	57.7	58.1	57.0	55.9	57.3	49.7
	Medium-high	66.4	63.8	59.7	60.6	60.5	58.9	60.3	53.2
	High	67.4	64.8	60.7	60.6	61.5	60.4	61.3	54.2
1000	Low	55.0	54.0	51.0	50.0	49.0	47.0	47.0	40.0
	Medium-low	68.0	61.0	59.0	61.0	63.0	61.0	61.0	52.0
	Medium	68.0	63.0	61.0	61.0	63.0	61.0	62.0	55.0
	Medium-high	69.0	66.0	62.0	62.0	65.0	61.0	63.0	57.0
	High	69.0	67.0	62.0	60.0	64.0	61.0	63.0	57.0
1200	Low	57.0	56.0	53.0	52.0	52.0	50.0	49.0	41.0
	Medium-low	65.0	61.0	59.0	60.0	60.0	58.0	59.0	50.0
	Medium	69.0	65.0	62.0	63.0	62.0	61.0	63.0	55.0
	Medium-high	72.0	67.0	64.0	65.0	66.0	64.0	66.0	58.0
	High	73.0	69.0	65.0	64.0	66.0	65.0	68.0	60.0

UNIT WIRING

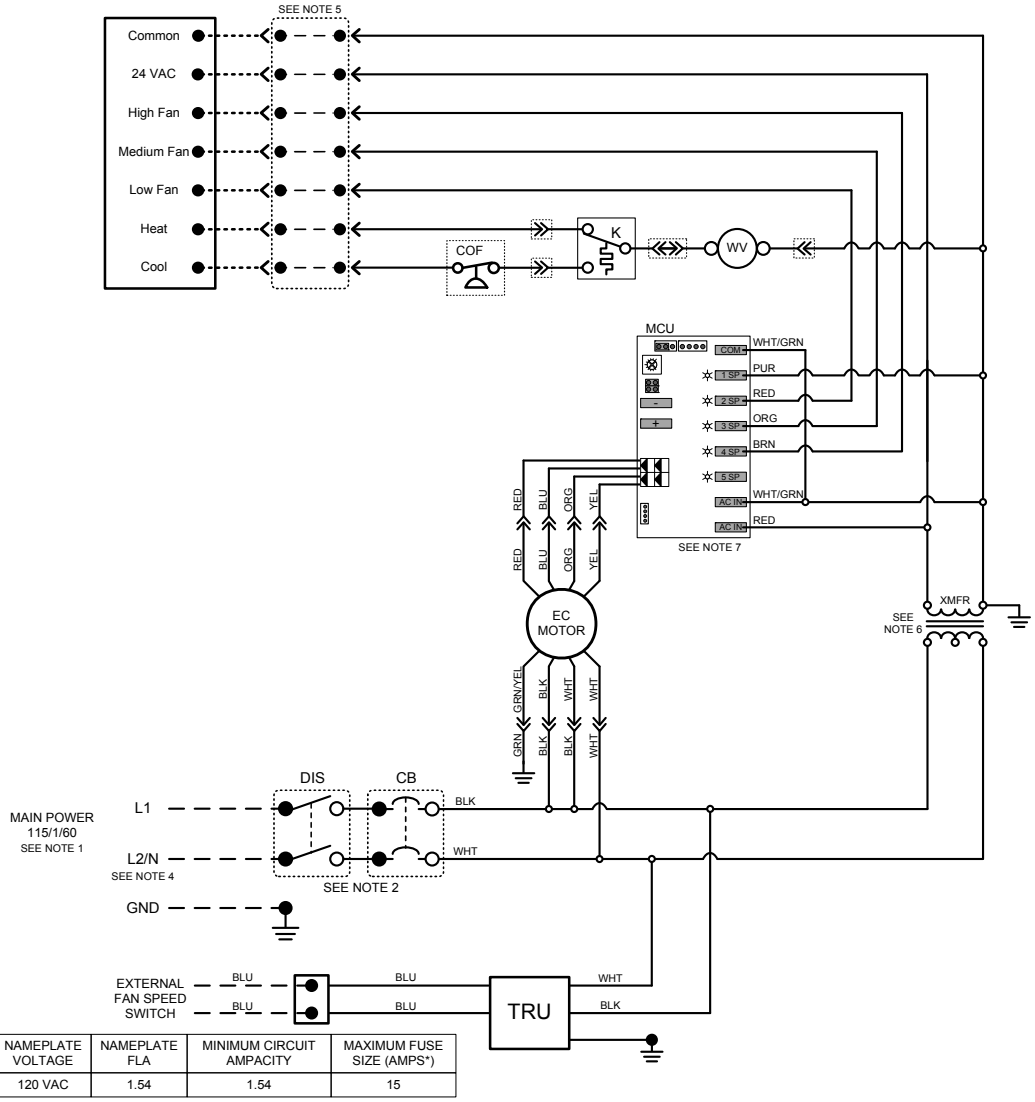

TRU ONLY	NAMEPLATE VOLTAGE	NAMEPLATE FLA	MINIMUM CIRCUIT AMPACITY	MAXIMUM FUSE SIZE (AMPS*)
	120 VAC	1.54	1.54	15

LEGEND:

- XFMR - 24VAC TRANSFORMER; 40 VA
- K - CHANGEOVER AQUASTAT
- WV - WATER CONTROL VALVE
- MCU - FAN MOTOR CONTROLLER
- COF - CONDENSATE OVERFLOW SWITCH
- DIS - DISCONNECT SWITCH
- CB - CIRCUIT BREAKER (See Note 3)
- TRU - THERMAL RECOVERY UNIT
- FACTORY WIRING
- FIELD WIRING
- OPTIONAL WIRING/ACCESSORY
- QUICK CONNECTION
- FACTORY CONNECTION
- FIELD CONNECTION
- LIGHT EMITTING DIODE INDICATOR
- GROUND CONNECTION

NOTES:

1. Use copper conductors only.
2. DPST switch for 208V applications only.
3. If used, CB replaces DIS
4. For 208-230V units, white wire is replaced with red wire to indicate L2.
5. Thermostat is field installed and may be remote mounted.
6. For 208-230V units, transformer is factory wired for operation at 230V. For 208V operation, move lead to 208V terminal.
7. MCU shown with typical fan speed connections. Actual speeds may vary by unit size.

42P11G-3b TRU1 ULF

8 November, 2019

UNIT WIRING

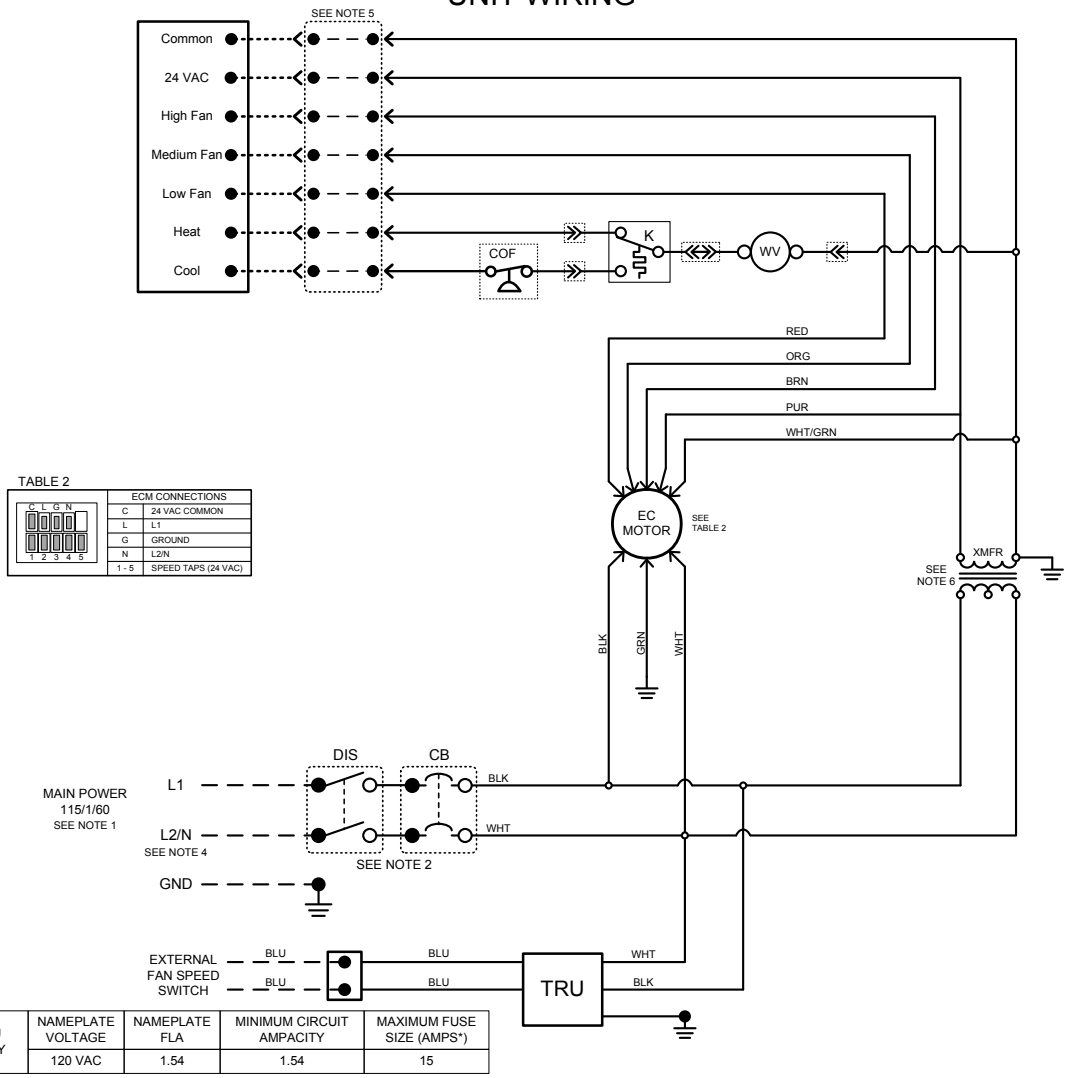

TABLE 2

C L G N	ECM CONNECTIONS	
	C	24 VAC COMMON
	L	L1
	G	GROUND
	N	L2/N
1 2 3 4 5	1 - 5	SPEED TAPS (24 VAC)

TRU ONLY	NAMEPLATE VOLTAGE	NAMEPLATE FLA	MINIMUM CIRCUIT AMPACITY	MAXIMUM FUSE SIZE (AMPS*)
	120 VAC	1.54	1.54	15

LEGEND:

- XFMR - 24VAC TRANSFORMER; 40 VA
- K - CHANGEOVER AQUASTAT
- WV - WATER CONTROL VALVE
- COF - CONDENSATE OVERFLOW SWITCH
- DIS - DISCONNECT SWITCH
- CB - CIRCUIT BREAKER (See Note 2)
- TRU - THERMAL RECOVERY UNIT
- FACTORY WIRING
- FIELD WIRING
- OPTIONAL WIRING/ACCESSORY
- QUICK CONNECTION
- FACTORY CONNECTION
- FIELD CONNECTION
- GROUND CONNECTION

NOTES:

1. Use copper conductors only.
2. DPST switch for 208V applications only.
3. If used, CB replaces DIS
4. For 208-230V units, white wire is replaced with red wire to indicate L2.
5. Thermostat is field installed and may be remote mounted.
6. For 208-230V units, transformer is factory wired for operation at 230V. For 208V operation, move lead to 208V terminal.

42P11D-3d TRU1 ULF
8 November, 2019

Wiring Diagram: 034P - 064P

UNIT WIRING

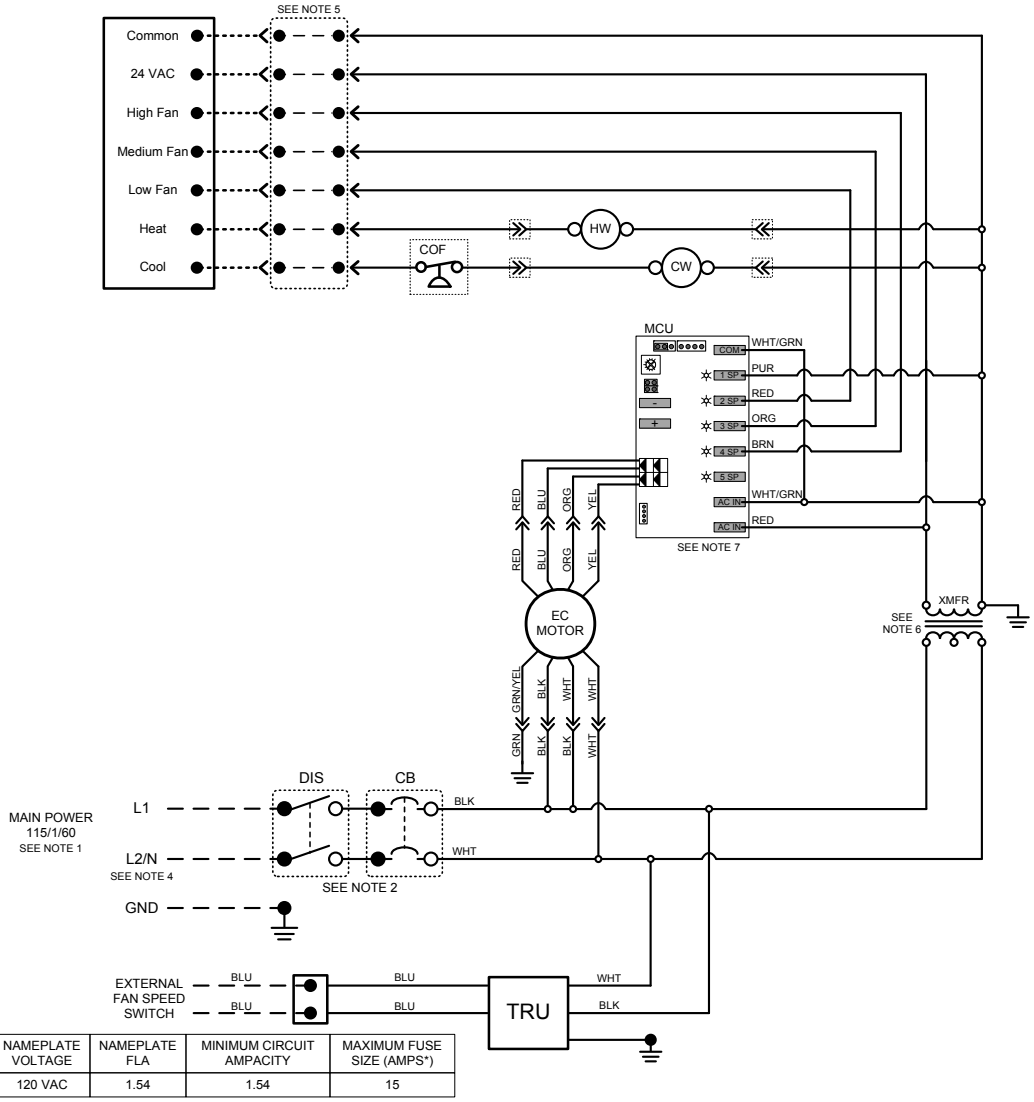

TRU ONLY	NAMEPLATE VOLTAGE	NAMEPLATE FLA	MINIMUM CIRCUIT AMPACITY	MAXIMUM FUSE SIZE (AMPS*)
	120 VAC	1.54	1.54	15

LEGEND:

	XFMR	- 24VAC TRANSFORMER; 40 VA
	HW	- HOT WATER CONTROL VALVE
	CW	- CHILLED WATER CONTROL VALVE
	MCU	- FAN MOTOR CONTROLLER
☐	COF	- CONDENSATE OVERFLOW SWITCH
☐	DIS	- DISCONNECT SWITCH
☐	CB	- CIRCUIT BREAKER (See Note 3)
	TRU	- THERMAL RECOVERY UNIT

———	- FACTORY WIRING
— — —	- FIELD WIRING
--------	- OPTIONAL WIRING/ACCESSORY
->>	- QUICK CONNECTION
○	- FACTORY CONNECTION
●	- FIELD CONNECTION
☼	- LIGHT EMITTING DIODE INDICATOR
⏚	- GROUND CONNECTION

NOTES:

1. Use copper conductors only.
2. DPST switch for 208V applications only.
3. If used, CB replaces DIS
4. For 208-230V units, white wire is replaced with red wire to indicate L2.
5. Thermostat is field installed and may be remote mounted.
6. For 208-230V units, transformer is factory wired for operation at 230V. For 208V operation, move lead to 208V terminal.
7. MCU shown with typical fan speed connections. Actual speeds may vary by unit size.

44P11G-3b TRU1 ULF

8 November, 2019

UNIT WIRING

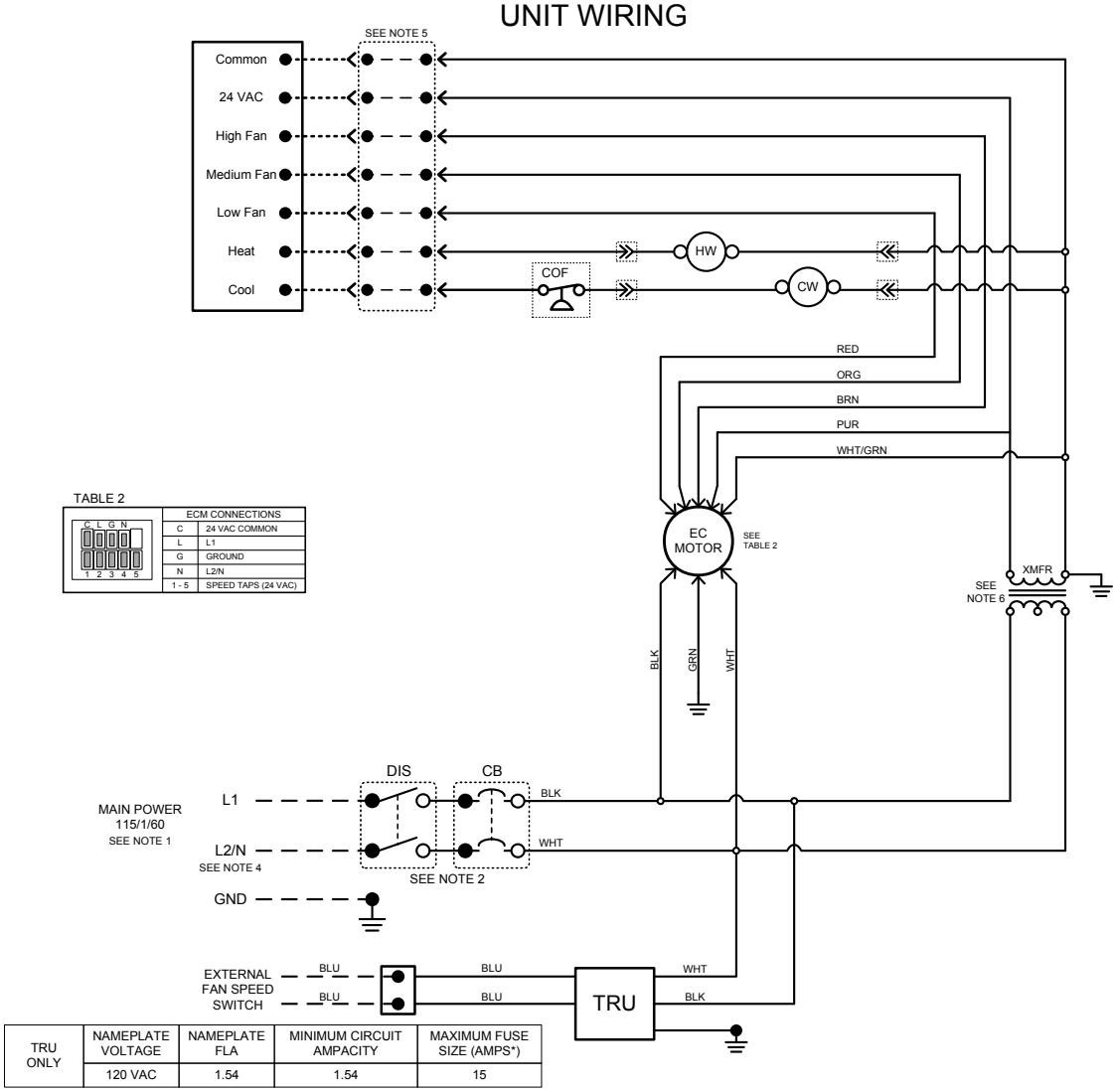

TABLE 2

ECM CONNECTIONS	
C	24 VAC COMMON
L	L1
G	GROUND
N	L2/N
1 - 5	SPEED TAPS (24 VAC)

TRU ONLY	NAMEPLATE VOLTAGE	NAMEPLATE FLA	MINIMUM CIRCUIT AMPACITY	MAXIMUM FUSE SIZE (AMPS*)
	120 VAC	1.54	1.54	15

LEGEND:

- XFMR - 24VAC TRANSFORMER; 40 VA
- HW - HOT WATER CONTROL VALVE
- CW - CHILLED WATER CONTROL VALVE
- COF - CONDENSATE OVERFLOW SWITCH
- DIS - DISCONNECT SWITCH
- CB - CIRCUIT BREAKER (See Note 2)
- TRU - THERMAL RECOVERY UNIT
- FACTORY WIRING
- FIELD WIRING
- OPTIONAL WIRING/ACCESSORY
- QUICK CONNECTION
- FACTORY CONNECTION
- FIELD CONNECTION
- GROUND CONNECTION

NOTES:

1. Use copper conductors only.
2. DPST switch for 208V applications only.
3. If used, CB replaces DIS
4. For 208-230V units, white wire is replaced with red wire to indicate L2.
5. Thermostat is field installed and may be remote mounted.
6. For 208-230V units, transformer is factory wired for operation at 230V. For 208V operation, move lead to 208V terminal.

44P11D-3d TRU1 ULF
8 November, 2019

EA = EXHAUST AIR (TO OUTSIDE)
IA = INTAKE AIR (FROM OUTSIDE)
RA = RECOVERY AIR (FROM WASHROOM)

ALL WITH 5" ROUND DUCT COLLARS

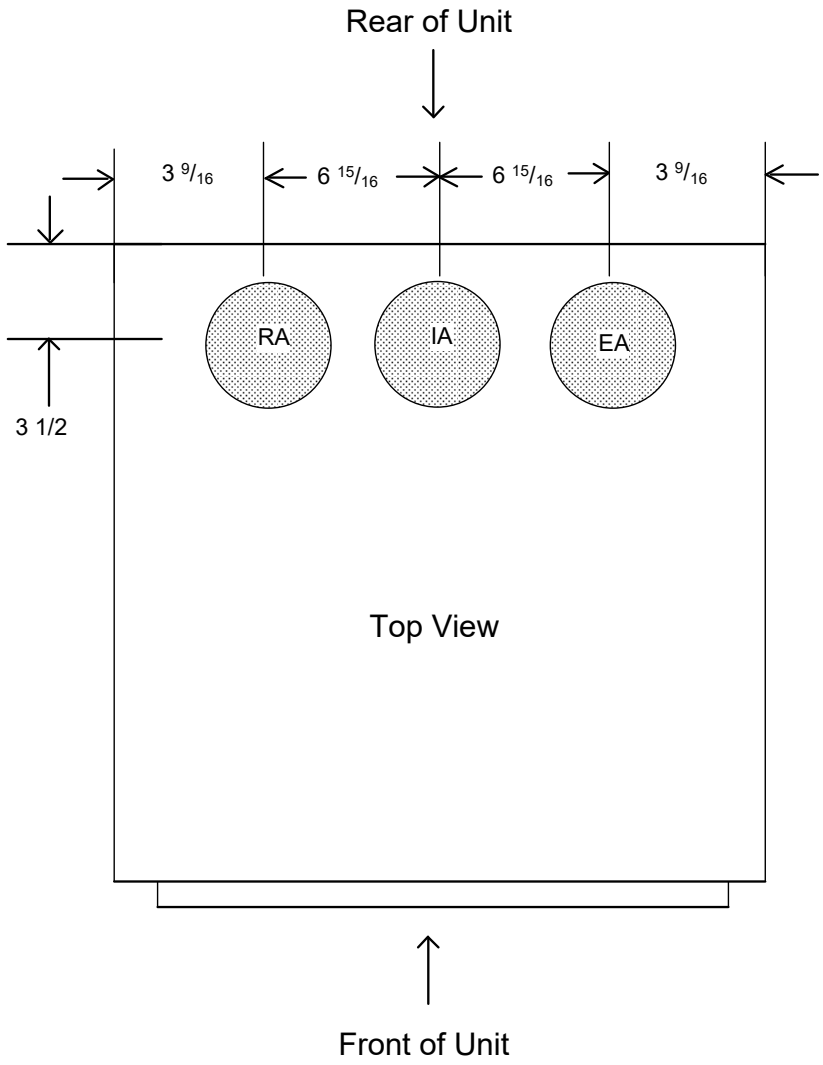

DRAWING NUMBER 622e-ITR
JANUARY 2020

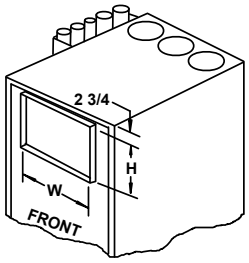

TYPE F
(FRONT)

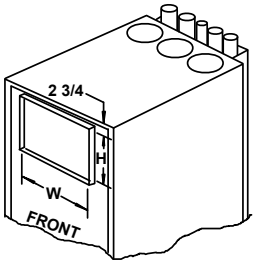

TYPE F
(FRONT)

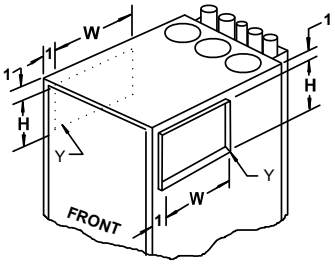

TYPE L-R
(LEFT-RIGHT)
CAN ONLY BE USED WITH
REAR RISERS

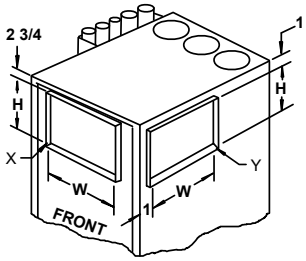

TYPE F-R
(FRONT & RIGHT)
RISERS MUST BE SIDE OPPOSITE
SUPPLY DISCHARGE

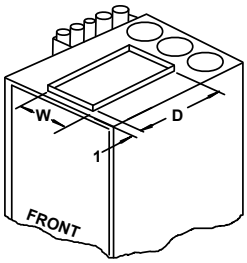

TYPE T
(TOP DUCTED)

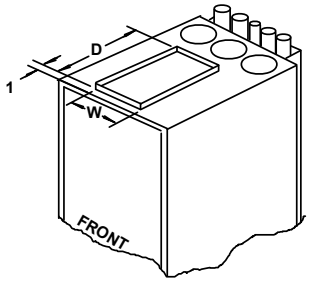

TYPE T
(TOP DUCTED)

FOUR PIPE UNITS SHOWN FOR ILLUSTRATION PURPOSES, MAY BE ONLY TWO PIPES.

LH SIDE RISER UNITS SHOWN ABOVE (RH OPPOSITE)

REAR RISER UNITS SHOWN ABOVE

Notes:

1. All Whalen supply grilles are fabricated of anodized aluminum and painted white.
2. See unit schedule for discharge types.
3. Supply grilles are shipped loose for installation after drywall installation is complete.
4. Listed grille dimensions are for the grille opening size.
5. All front and top grilles are centered on the unit.
6. Unless otherwise noted, the grille blades will be vertical.
7. Registers must not be used.
8. Where Type T is combined with Type F, L or R, grille height will be that of a two-grille discharge.
9. For top ducted units see drawing number 622-ITR for TRU connections.
10. For units with side risers and a side supply discharge, supply must be side opposite risers.

UNIT SIZE	GRILLE	1 Grille Type (F)		2 Grille Type (F-L, F-R, L-R, T-L,T-R,T-F)		Top Ducted Type (T, T-L,T-R,T-F)	
		W	H	W	H	W	D
W(N,T)X-034P & W(N,T)X-032P		14	8	14	6	12	10
W(N,T)X-044P & W(N,T)X-042P		14	10	14	6	12	12
W(N,T)X-064P & W(N,T)X-062P		16	12	16	6	14	14
W(N,T)X-084P & W(N,T)X-082P		16	16	16	8	14	16
W(N,T)X-104P & W(N,T)X-102P	X	16	16	16	8	16	16
	Y			10	21		
W(N,T)X-124P & W(N,T)X-122P	X	16	16	16	8	16	16
	Y			10	21		

DRAWING NUMBER 4511c -ITR
MARCH 2021

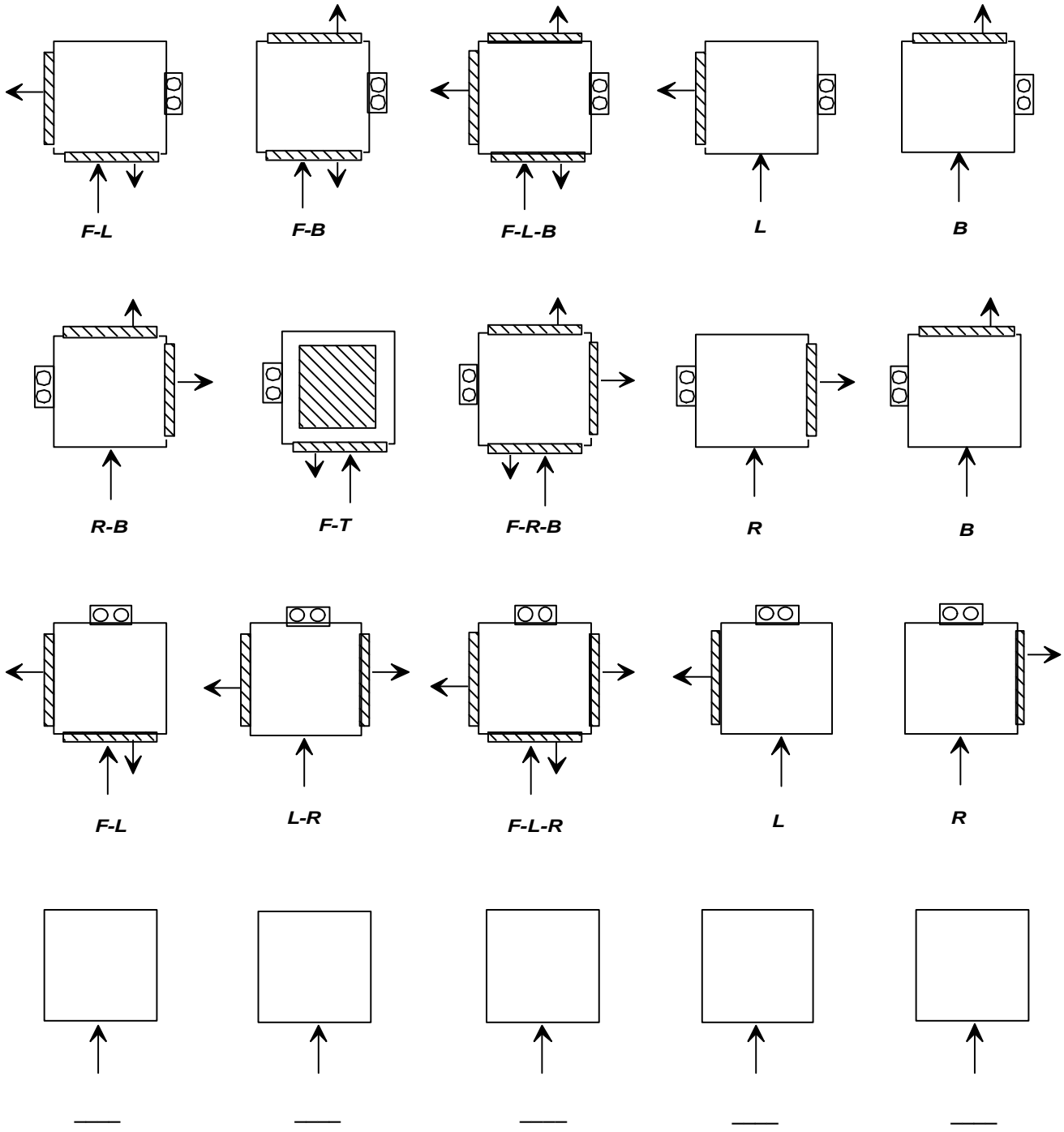

LARGE ARROW REPRESENTS RETURN AIR LOCATION AND SMALL ARROWS REPRESENT DISCHARGE LOCATION.

B = BACK OR REAR L = LEFT R = RIGHT F = FRONT T = TOP

DRAWING NUMBER 411PV

DECEMBER 1998

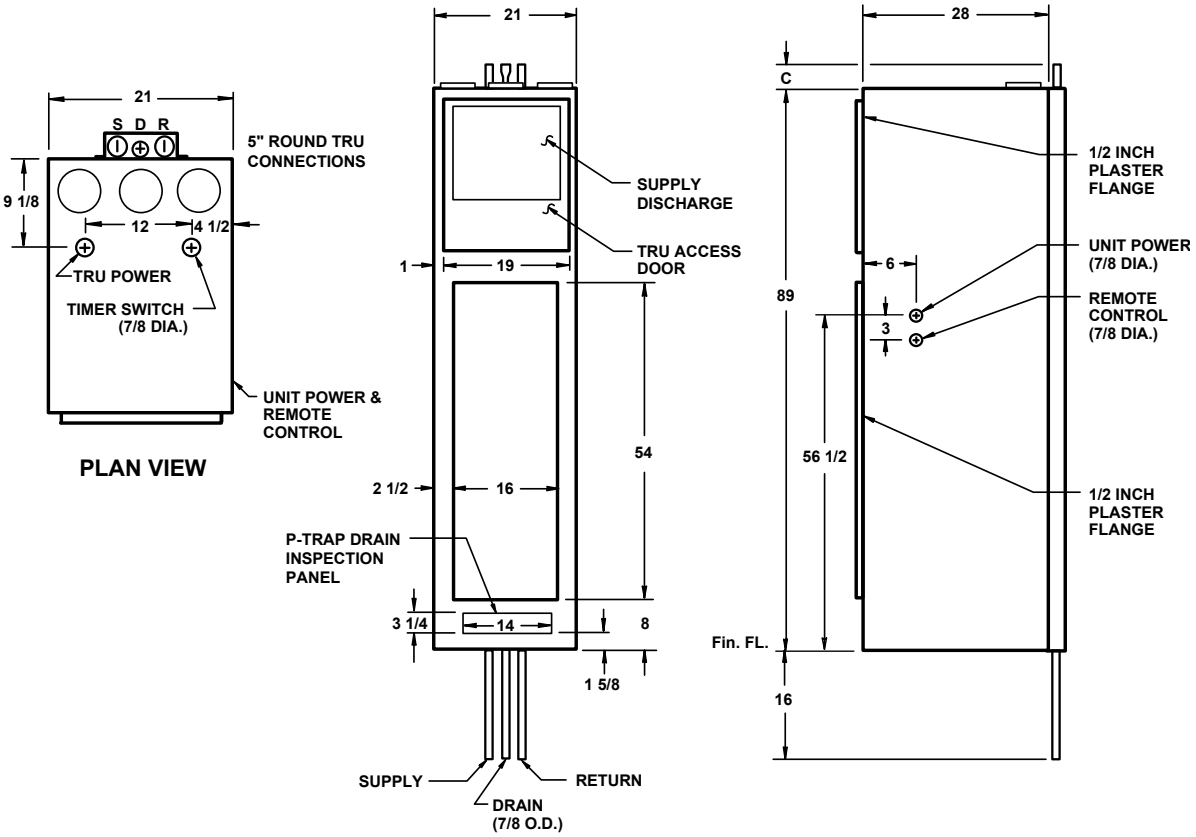

Notes:

1. **The return air opening is always on the front of the unit.**
2. **Cabinet is acoustically and thermally insulated, and is fabricated of galvanized steel.**
3. **Supply, return and drain risers are copper (see notes page for copper type). Riser assemblies include four ball valves inside the cabinet. Standard units include high-pressure hose kits connection of the hydronic chassis.**
4. **See drawing 408-PT-ITR for plan view.**
5. **Fan motor is constant-torque ECM type. With no heat/cool demand, fan will operate constantly on ultra Low speed.**
6. **TRU maximum exhaust = 162 CFM intermittant. TRU maximum ventilation = 95 CFM constant.**
7. **See drawing 622-ITR for TRU connections.**
8. **Unit power and remote control are on right side.**

RISER LENGTH	C
9 FOOT	3
10 FOOT	15

All dimensions in inches.

DRAWING NUMBER 457-PT-ITR-R
FEBRUARY 2020

2 Pipe with Thermal Recovery - Rear Risers: 10-12

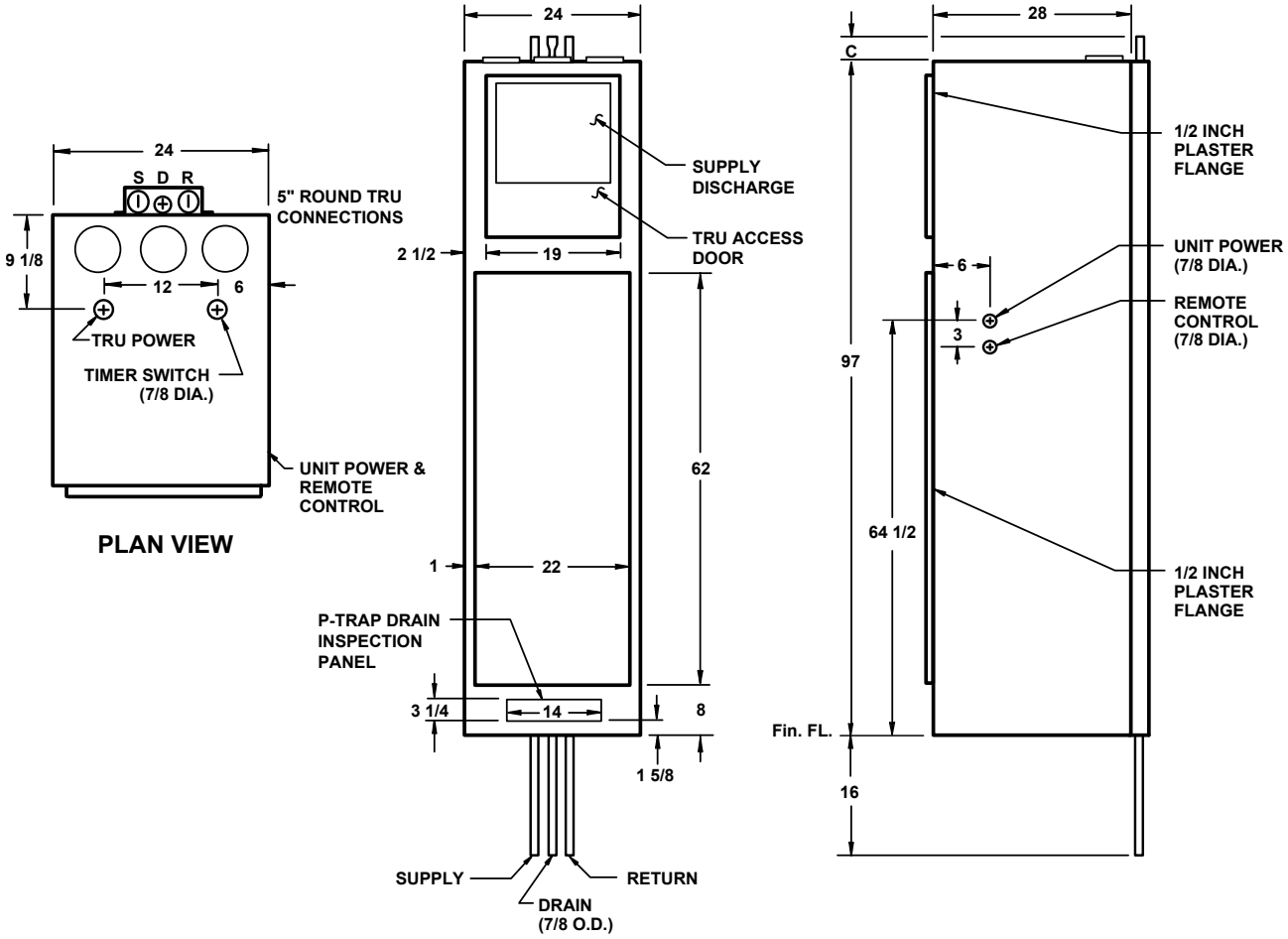

Notes:

1. **The return air opening is always on the front of the unit.**
2. **Cabinet is acoustically and thermally insulated, and is fabricated of galvanized steel.**
3. **Supply, return and drain risers are copper (see notes page for copper type). Riser assemblies include four ball valves inside the cabinet. Standard units include high-pressure hose kits connection of the hydronic chassis.**
4. **See drawing 408-PT-ITR for plan view.**
5. **Fan motor is constant-torque ECM type. With no heat/cool demand, fan will operate constantly on ultra Low speed.**
6. **TRU maximum exhaust = 162 CFM intermittant. TRU maximum ventilation = 95 CFM constant.**
7. **See drawing 622-ITR for TRU connections.**
8. **Unit power and remote control are on right side.**

RISER LENGTH	C
10 FOOT	7

All dimensions in inches.

DRAWING NUMBER 457-PT-ITR-R-K
MARCH 2021

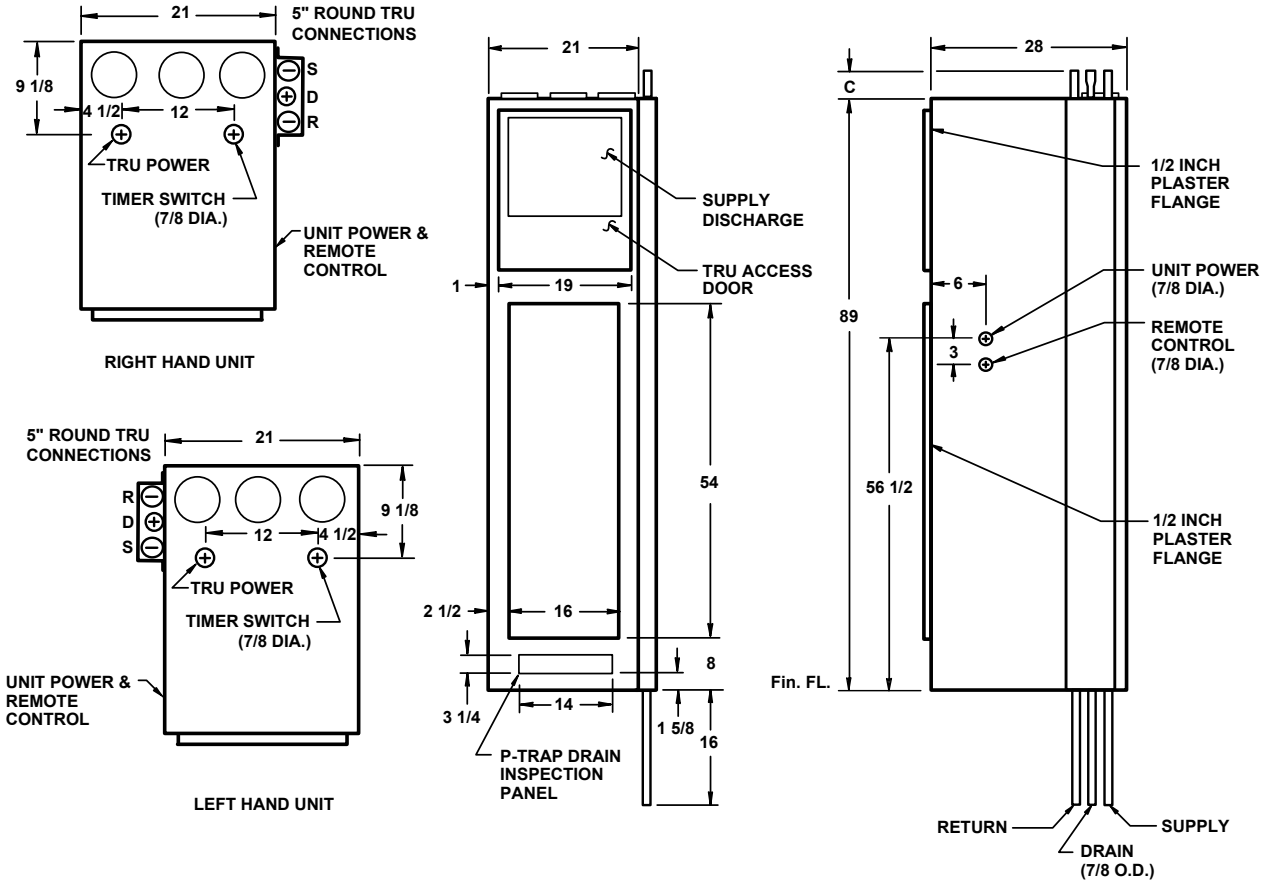

PLAN VIEW

FRONT VIEW

RH SIDE RISERS SHOWN
LH SIDE RISERS OPPOSITE

RIGHT SIDE VIEW

RH SIDE RISERS SHOWN
LH SIDE RISERS OPPOSITE

Notes:

1. The return air opening is always on the front of the unit.
2. Cabinet is acoustically and thermally insulated, and is fabricated of galvanized steel.
3. Supply, return and drain risers are copper (see notes page for copper type). Riser assemblies include four ball valves inside the cabinet. Standard units include high-pressure hose kits connection of the hydronic chassis.
4. See drawing 408-PT-ITR for plan view.
5. Fan motor is constant-torque ECM type. With no heat/cool demand, fan will operate constantly on Ultra Low speed.
6. TRU maximum exhaust = 162 CFM intermittent. TRU maximum ventilation = 95 CFM constant.
7. See drawing 622-ITR for TRU connections.
8. Side unit power and remote control are on riser side.

RISER LENGTH	C
9 FOOT	3
10 FOOT	15

All dimensions in inches.

DRAWING NUMBER 457-PT-ITR-S
FEBRUARY 2020

2 Pipe with Thermal Recovery - Side Risers: 10-12

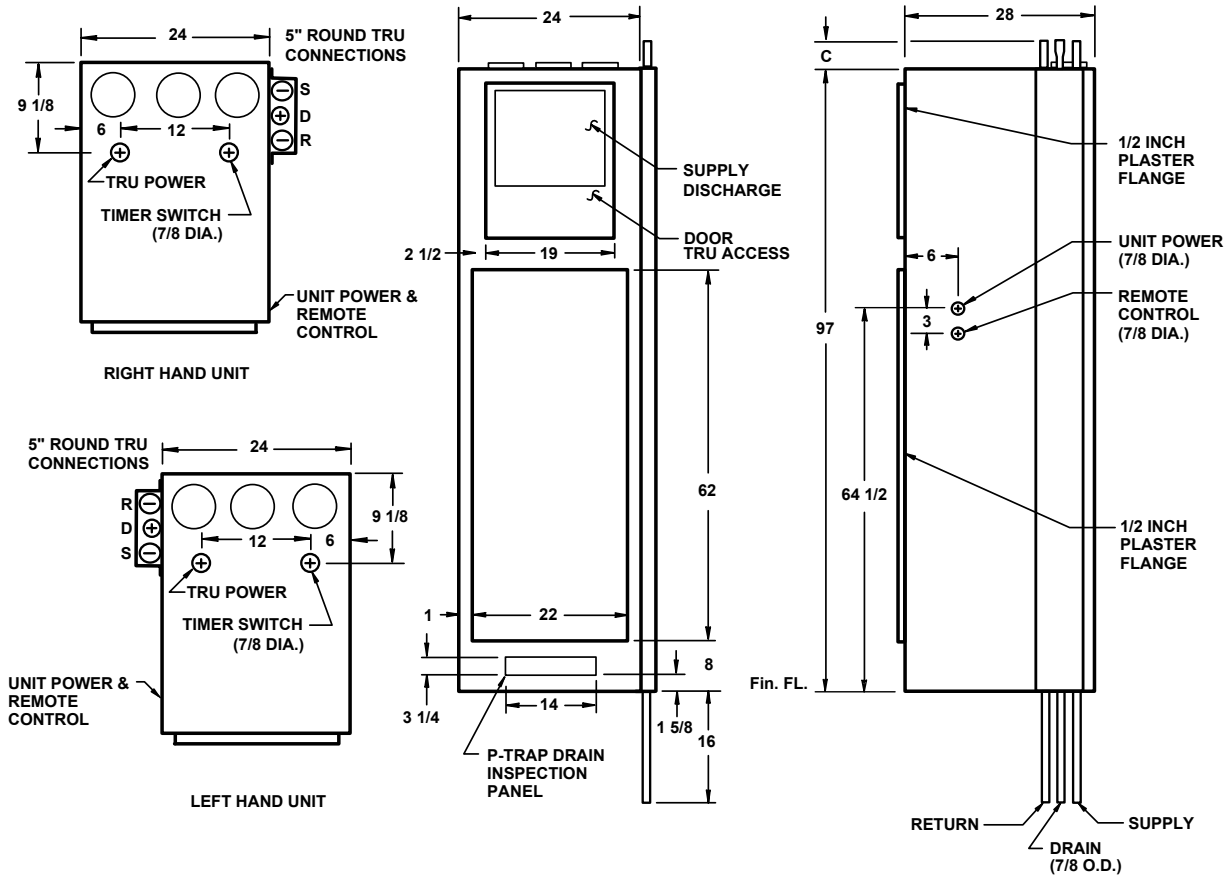

PLAN VIEW

FRONT VIEW

RH SIDE RISERS SHOWN
LH SIDE RISERS OPPOSITE

RIGHT SIDE VIEW

RH SIDE RISERS SHOWN
LH SIDE RISERS OPPOSITE

Notes:

1. The return air opening is always on the front of the unit.
2. Cabinet is acoustically and thermally insulated, and is fabricated of galvanized steel.
3. Supply, return and drain risers are copper (see notes page for copper type). Riser assemblies include four ball valves inside the cabinet. Standard units include high-pressure hose kits connection of the hydronic chassis.
4. See drawing 408-PT-ITR for plan view.
5. Fan motor is constant-torque ECM type. With no heat/cool demand, fan will operate constantly on Ultra Low speed.
6. TRU maximum exhaust = 162 CFM intermittent. TRU maximum ventilation = 95 CFM constant.
7. See drawing 622-ITR for TRU connections.
8. Side unit power and remote control are on riser side.

RISER LENGTH	C
10 FOOT	7

All dimensions in inches.

DRAWING NUMBER 457-PT-ITR-S-K
MARCH 2021

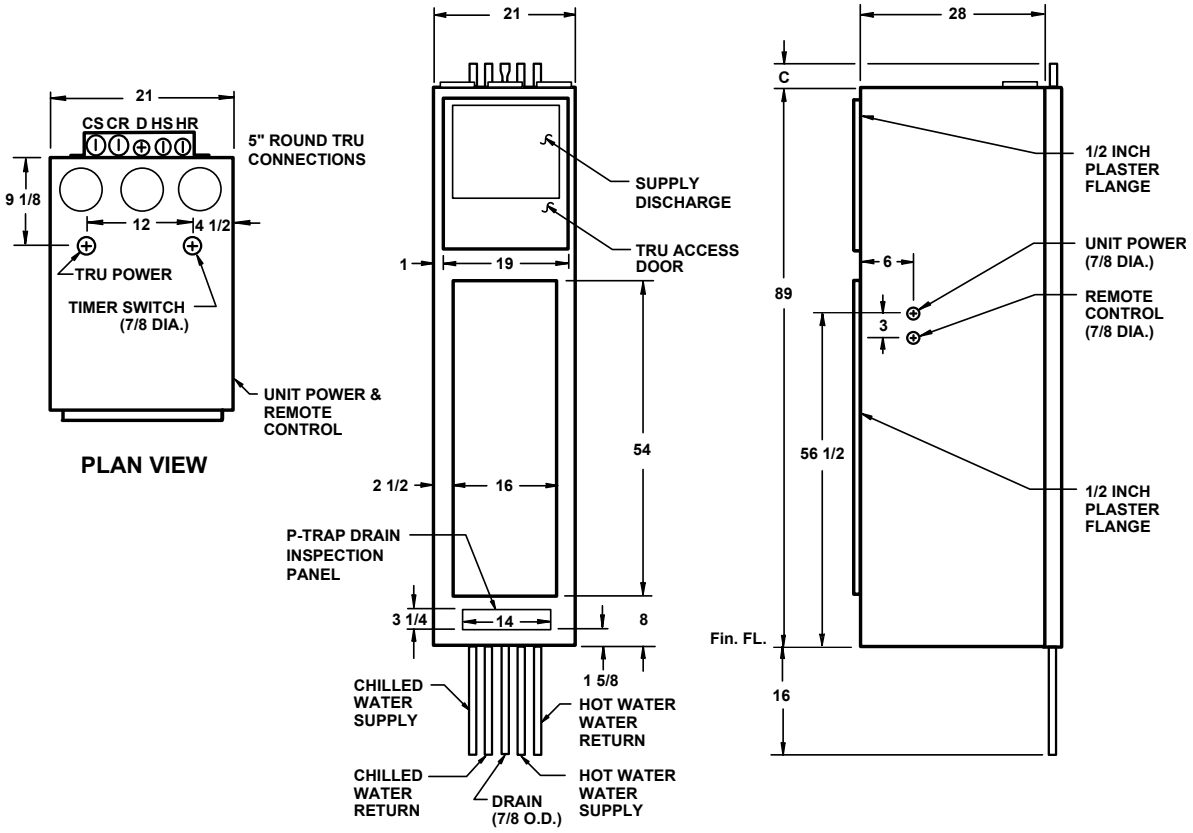

Notes:

1. **The return air opening is always on the front of the unit.**
2. **Cabinet is acoustically and thermally insulated, and is fabricated of galvanized steel.**
3. **Supply, return and drain risers are copper (see notes page for copper type). Riser assemblies include four ball valves inside the cabinet. Standard units include high-pressure hose kits connection of the hydronic chassis.**
4. **See drawing 409-PT-ITR for plan view.**
5. **Fan motor is constant-torque ECM type. With no heat/cool demand, fan will operate constantly on ultra Low speed.**
6. **TRU maximum exhaust = 162 CFM intermittant. TRU maximum ventilation = 95 CFM constant.**
7. **See drawing 622-ITR for TRU connections.**
8. **Unit power and remote control are on right side.**

RISER LENGTH	C
9 FOOT	3
10 FOOT	15

All dimensions in inches.

DRAWING NUMBER 458-PT-ITR-R
FEBRUARY 2020

4 Pipe with Thermal Recovery - Rear Risers: 10-12

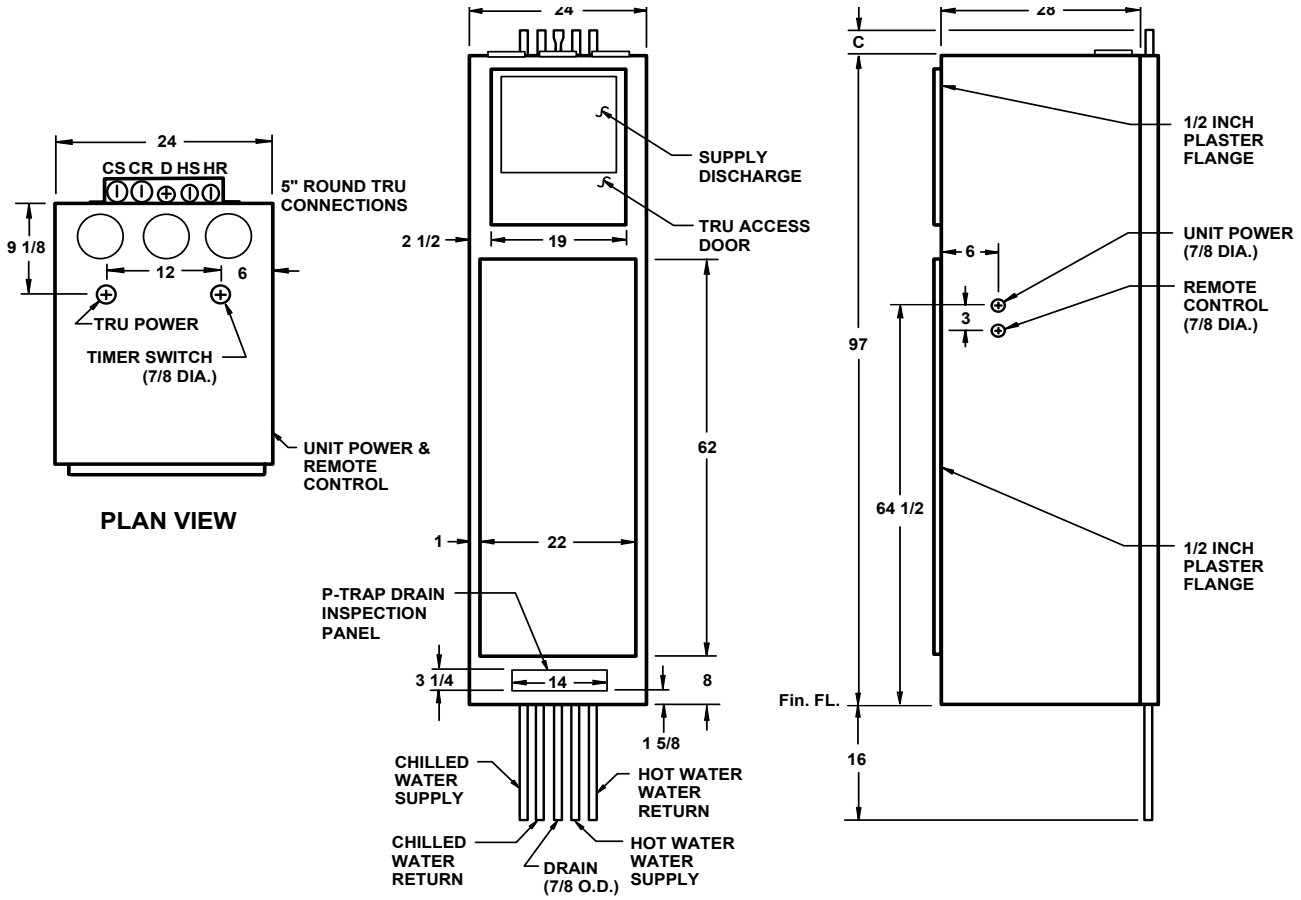

Notes:

1. **The return air opening is always on the front of the unit.**
2. **Cabinet is acoustically and thermally insulated, and is fabricated of galvanized steel.**
3. **Supply, return and drain risers are copper (see notes page for copper type). Riser assemblies include four ball valves inside the cabinet. Standard units include high-pressure hose kits connection of the hydronic chassis.**
4. **See drawing 409-PT-ITR for plan view.**
5. **Fan motor is constant-torque ECM type. With no heat/cool demand, fan will operate constantly on ultra Low speed.**
6. **TRU maximum exhaust = 162 CFM intermittant. TRU maximum ventilation = 95 CFM constant.**
7. **See drawing 622-ITR for TRU connections.**
8. **Unit power and remote control are on right side.**

RISER LENGTH	C
10 FOOT	7

All dimensions in inches.

DRAWING NUMBER 458-PT-ITR-R-K
MARCH 2021

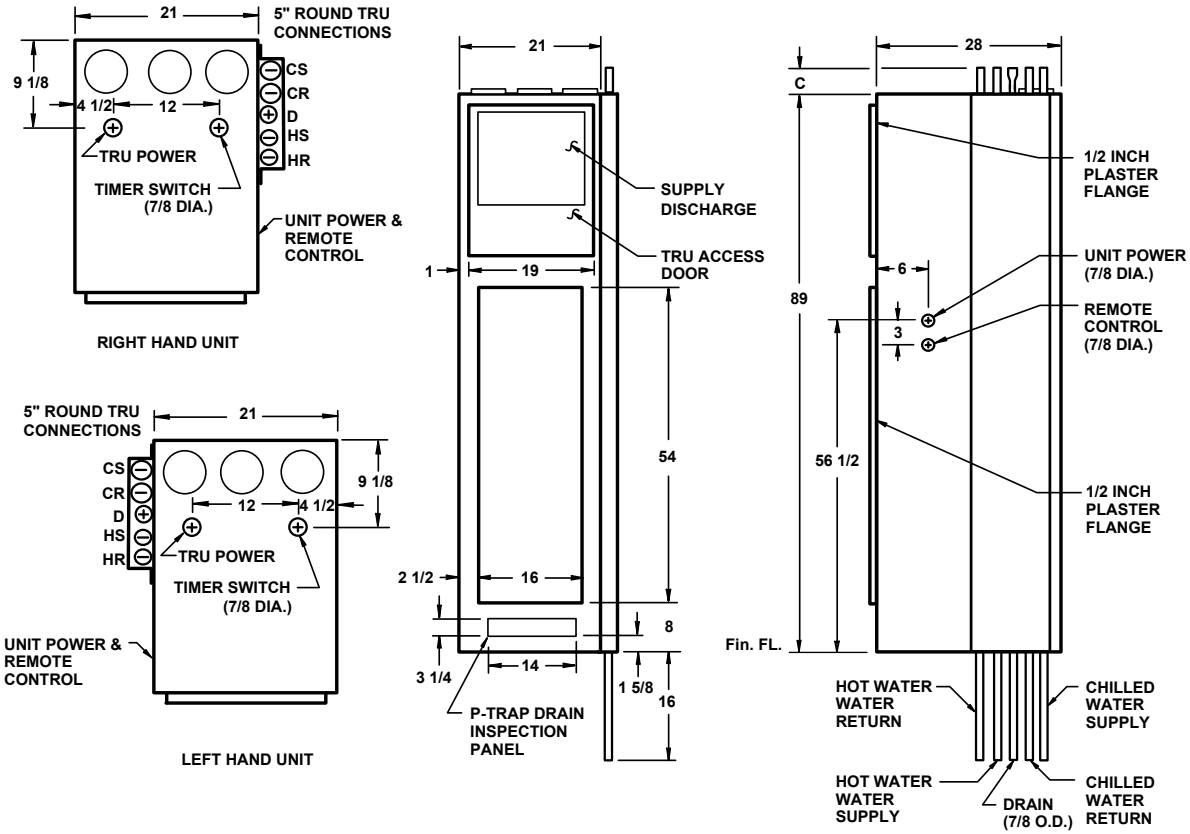

PLAN VIEW

FRONT VIEW

RH SIDE RISERS SHOWN
LH SIDE RISERS OPPOSITE

RIGHT SIDE VIEW

RH SIDE RISERS SHOWN
LH SIDE RISERS OPPOSITE

Notes:

1. The return air opening is always on the front of the unit.
2. Cabinet is acoustically and thermally insulated, and is fabricated of galvanized steel.
3. Supply, return and drain risers are copper (see notes page for copper type). Riser assemblies include four ball valves inside the cabinet. Standard units include high-pressure hose kits connection of the hydronic chassis.
4. See drawing 409-PT-ITR for plan view.
5. Fan motor is constant-torque ECM type. With no heat/cool demand, fan will operate constantly on Ultra Low speed.
6. TRU maximum exhaust = 162 CFM intermittent. TRU maximum ventilation = 95 CFM constant.
7. See drawing 622-ITR for TRU connections.
8. Side unit power and remote control are on riser side.

RISER LENGTH	C
9 FOOT	3
10 FOOT	15

All dimensions in inches.

DRAWING NUMBER 458-PT-ITR-S
FEBRUARY 2020

4 Pipe with Thermal Recovery - Side Risers: 10-12

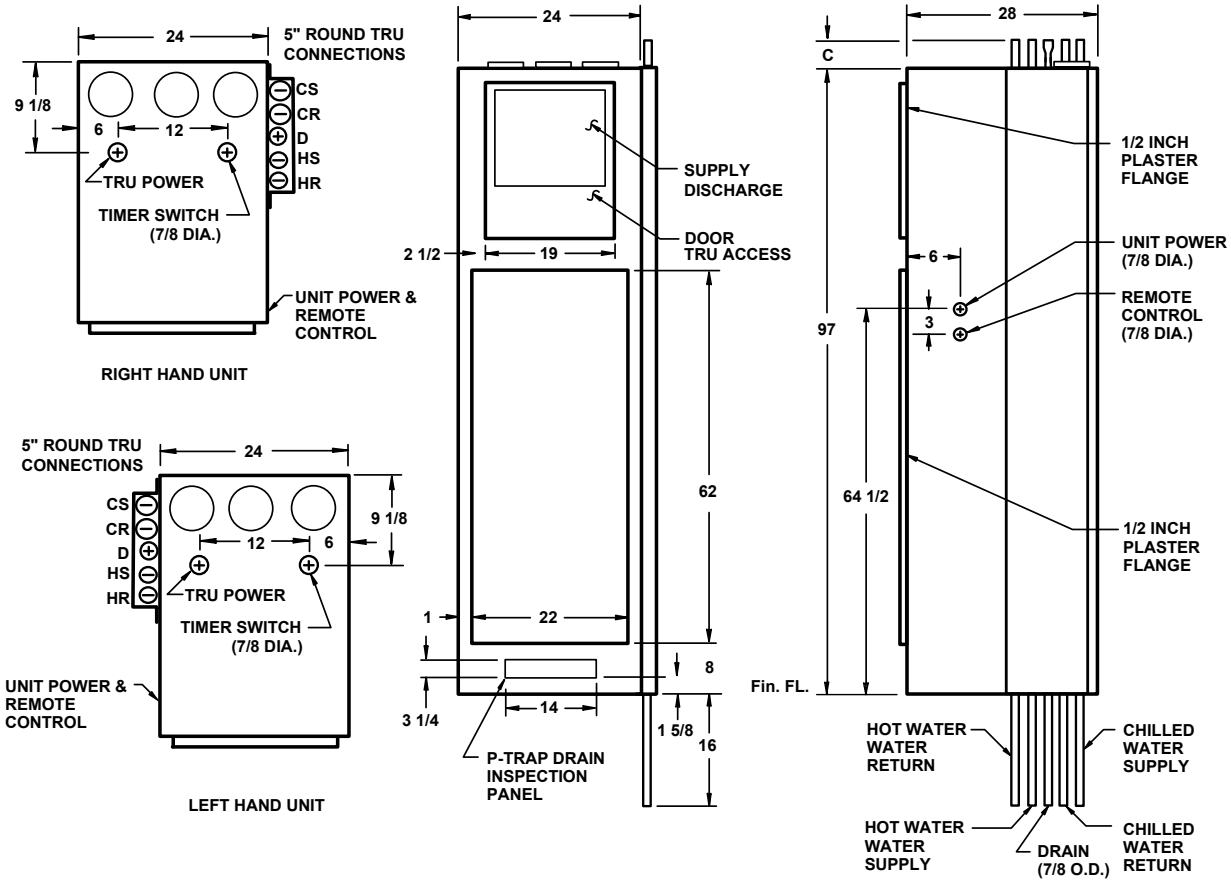

PLAN VIEW

FRONT VIEW

RH SIDE RISERS SHOWN
LH SIDE RISERS OPPOSITE

RIGHT SIDE VIEW

RH SIDE RISERS SHOWN
LH SIDE RISERS OPPOSITE

Notes:

1. The return air opening is always on the front of the unit.
2. Cabinet is acoustically and thermally insulated, and is fabricated of galvanized steel.
3. Supply, return and drain risers are copper (see notes page for copper type). Riser assemblies include four ball valves inside the cabinet. Standard units include high-pressure hose kits connection of the hydronic chassis.
4. See drawing 409-PT-ITR for plan view.
5. Fan motor is constant-torque ECM type. With no heat/cool demand, fan will operate constantly on Ultra Low speed.
6. TRU maximum exhaust = 162 CFM intermittent. TRU maximum ventilation = 95 CFM constant.
7. See drawing 622-ITR for TRU connections.
8. Side unit power and remote control are on riser side.

RISER LENGTH	C
10 FOOT	7

All dimensions in inches.

DRAWING NUMBER 458-PT-ITR-S-K
MARCH 2021

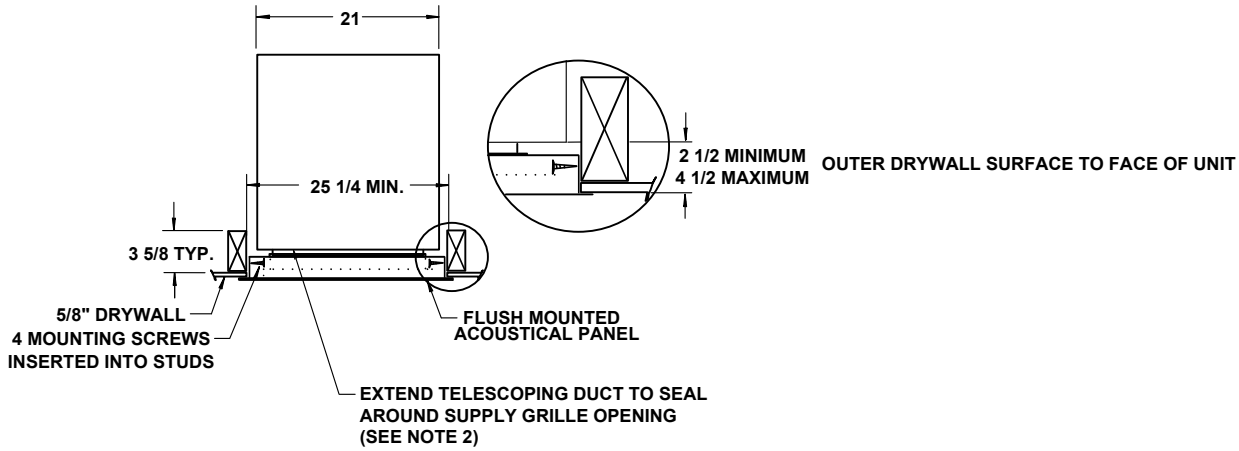

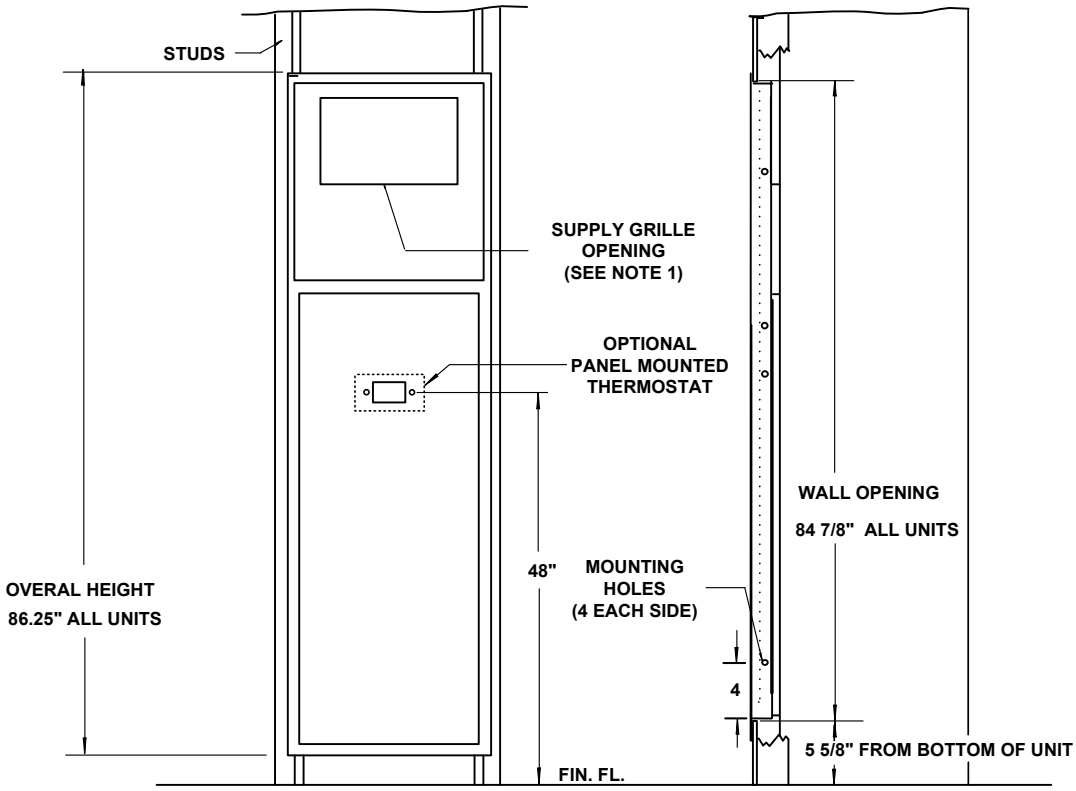

Notes:

1. **Refer to drawing 4511-ITR for supply types and sizes.**
2. **Telescoping duct is included on all cabinets with front supply.**

DRAWING NUMBER: WAFPa-TR-InteliTherm1
MAY 2020

Flush Mount Return Panel: 03-08

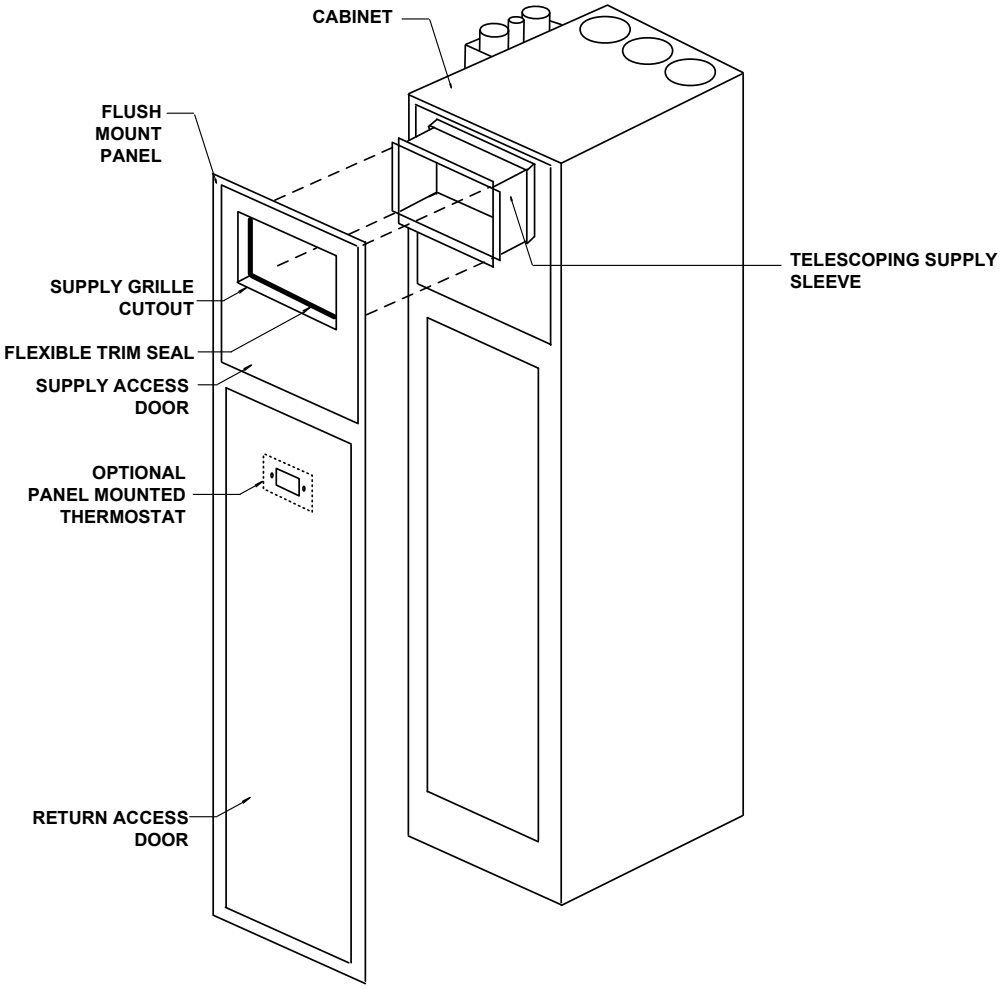

Notes:

1. **Panel centered on unit.**
2. **Supply extension is adjustable and must butt up to the grille opening that creates a seal to avoid short cycling.**
3. **Two pipe unit shown for illustration purposes, may be four pipe unit.**

DRAWING NUMBER: WAFPa-TR-InteliTherm2
MAY 2020

Flush Mount Return Panel: 03-08

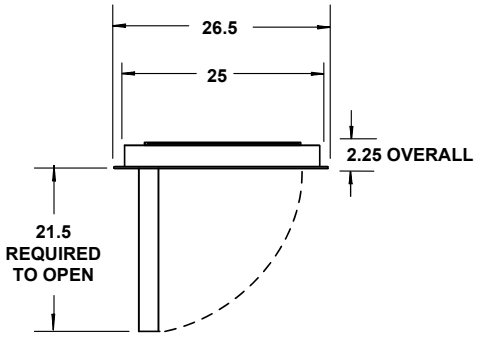

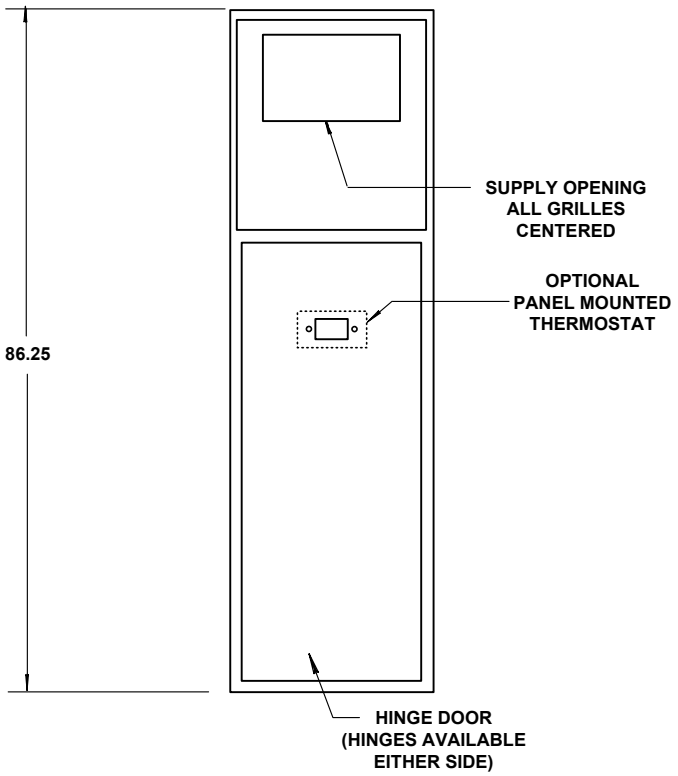

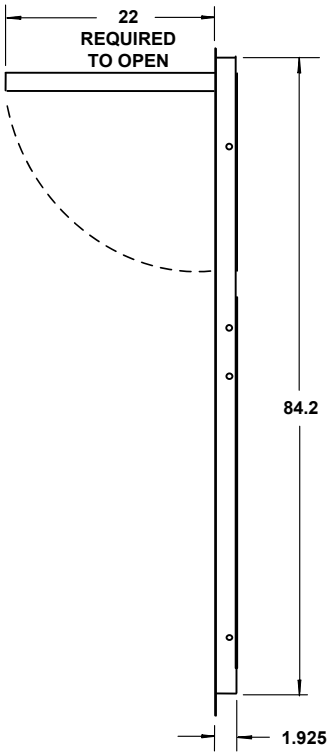

ALL DIMENSIONS IN INCHES

DRAWING NUMBER: WAFPa-TR-InteliTherm3
MAY 2020

Flush Mount Return Panel: 10-12

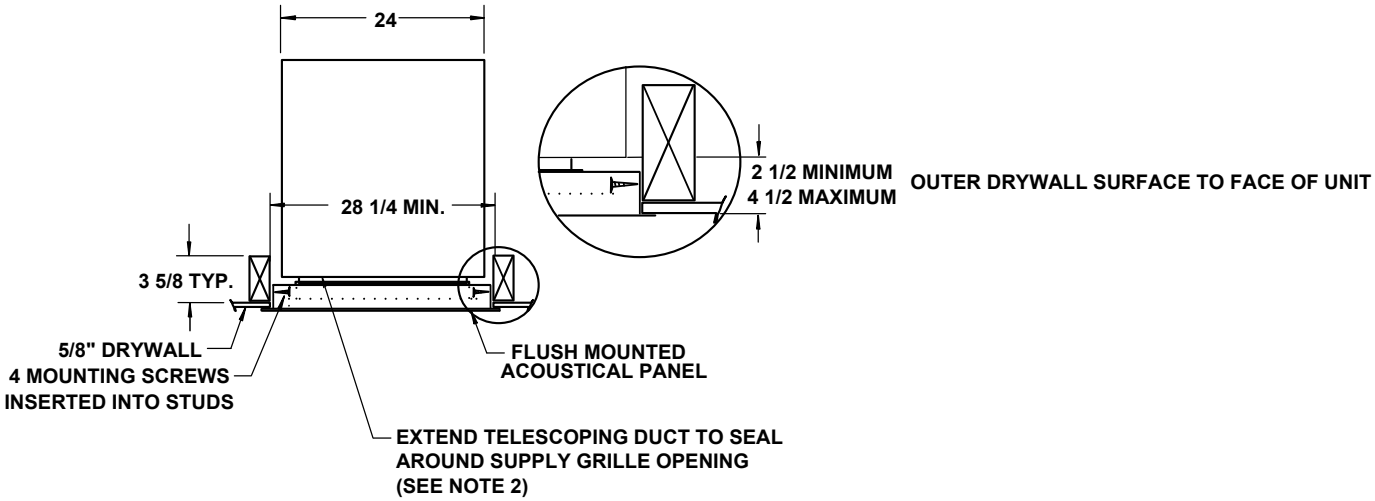

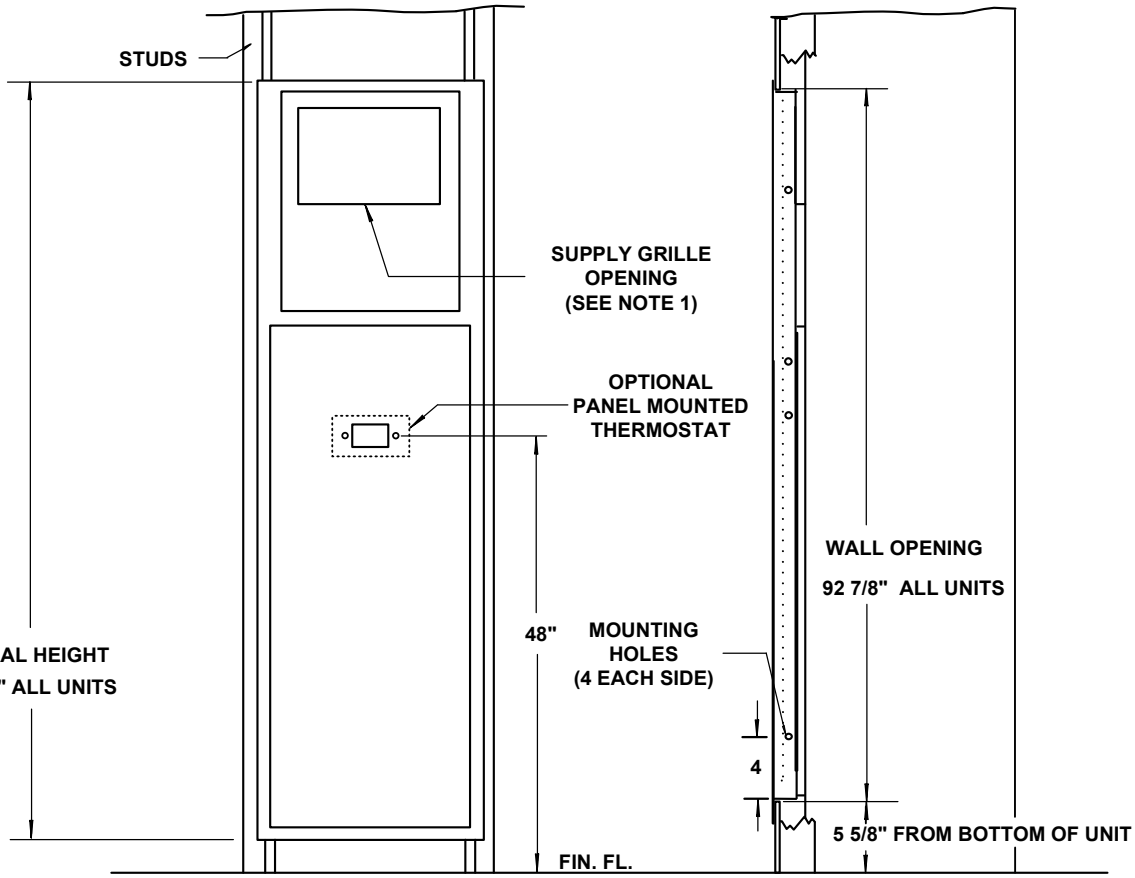

Notes:

1. Refer to drawing 4511-ITR for supply types and sizes.
2. Telescoping duct is included on all cabinets with front supply.

DRAWING NUMBER: WAFP-K-TR-InteliTherm1 (1 of 3)
MARCH 2021

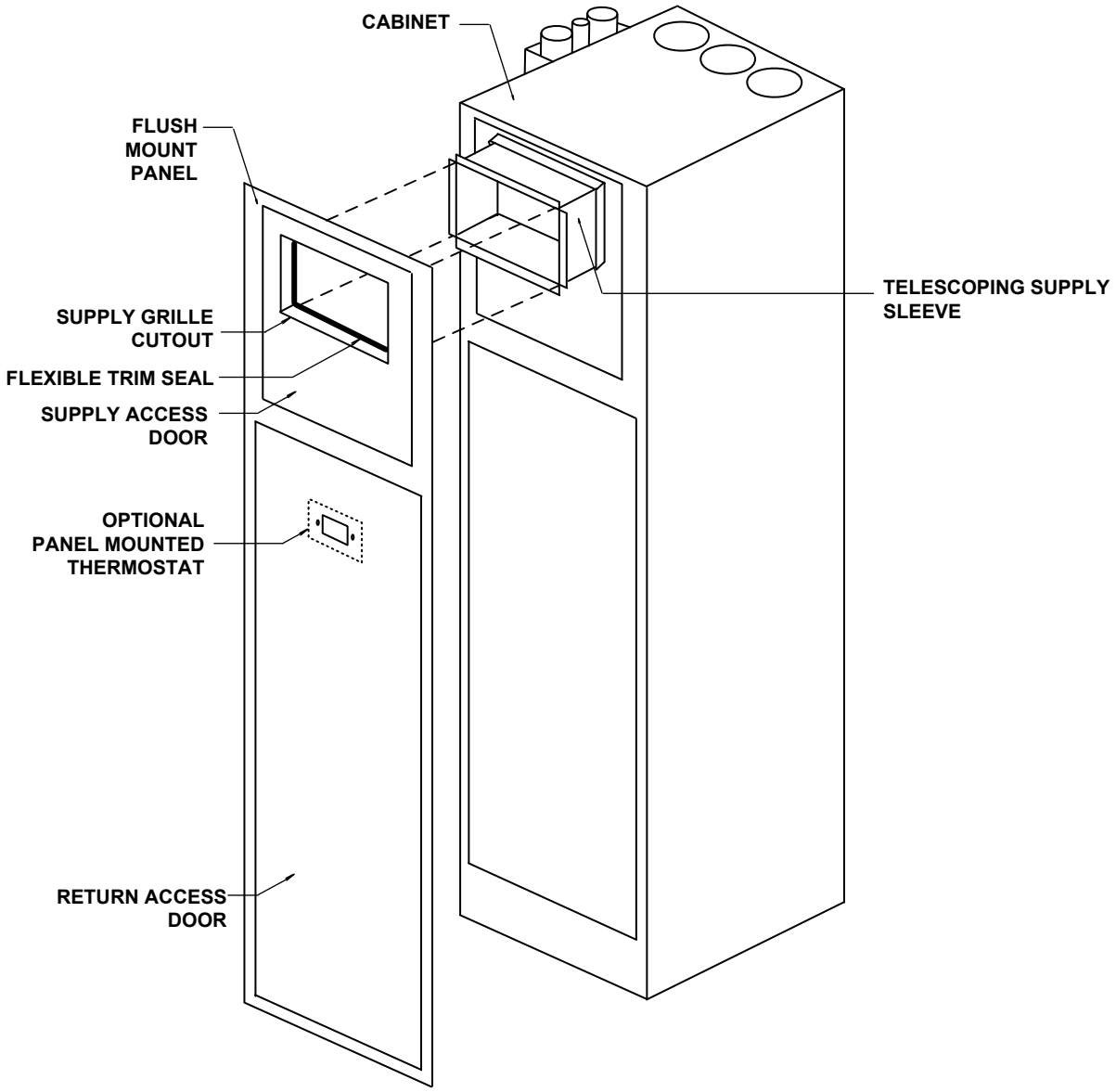

Notes:

1. **Panel centered on unit.**
2. **Supply extension is adjustable and must butt up to the grille opening that creates a seal to avoid short cycling.**
3. **Two pipe unit shown for illustration purposes, may be four pipe unit.**

DRAWING NUMBER: WAFP-K-TR-InteliTherm2 (2 of 3)
MARCH 2021

Flush Mount Return Panel: 10-12

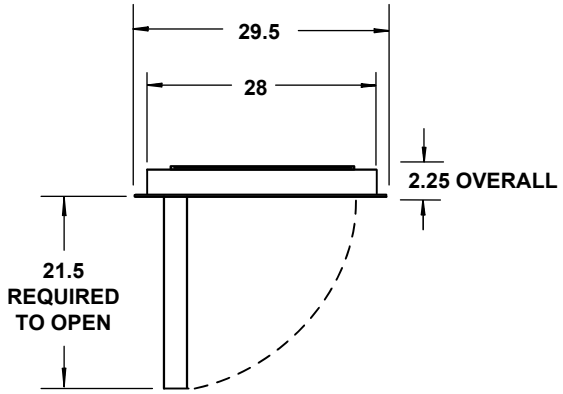

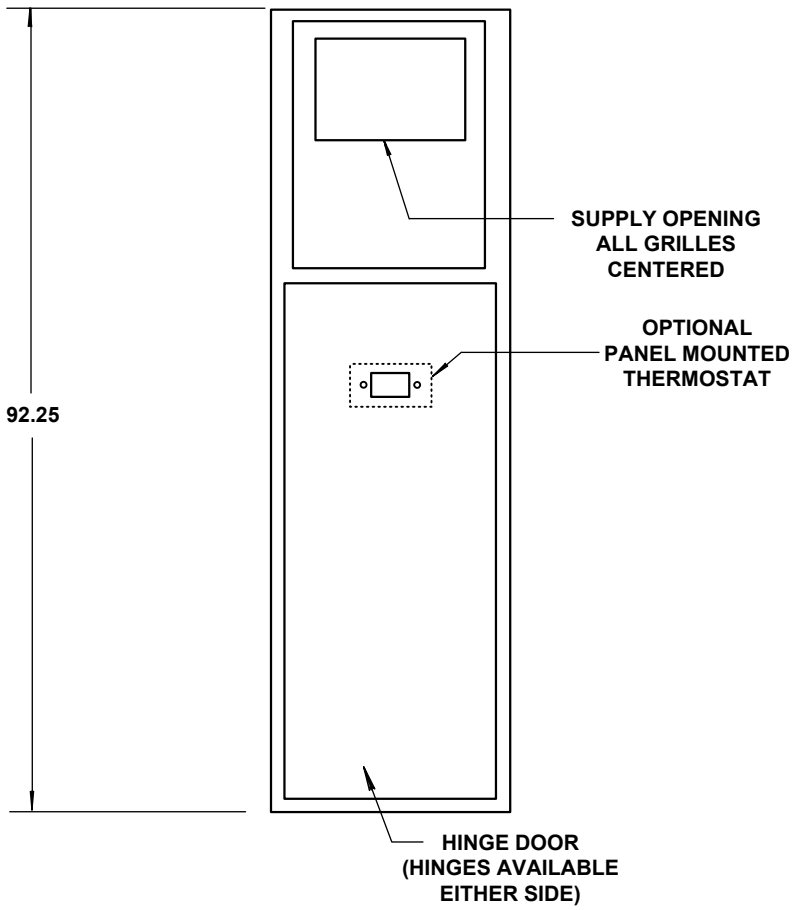

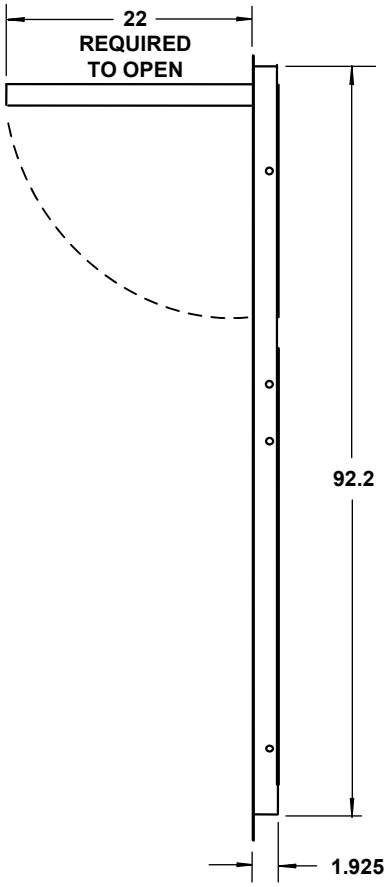

DRAWING NUMBER: WAFP-K-TR-InteliTherm3 (3 of 3)

MARCH 2021

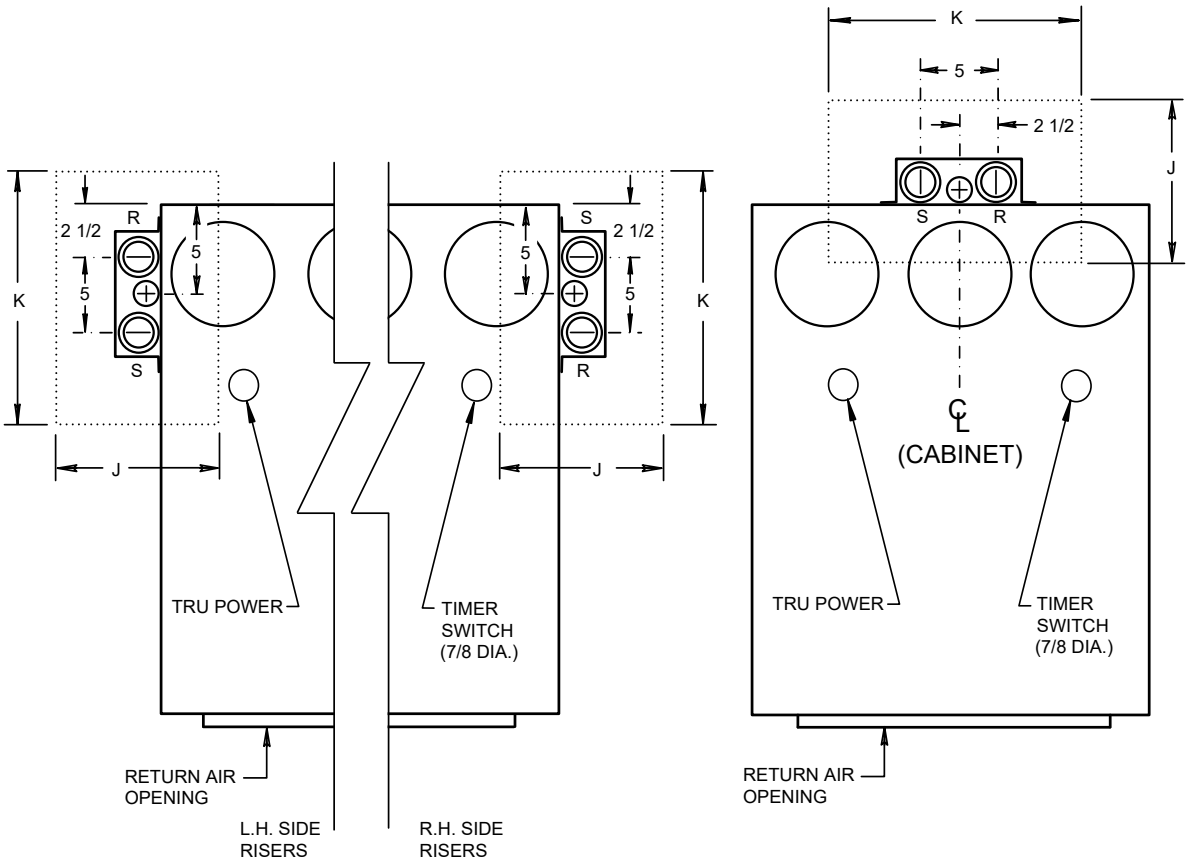

SIDE RISERS

REAR RISERS

Notes:

1. Risers are protected by a steel riser cover extending the height of the cabinet. Risers are soldered to a copper clamp to help prevent movement during shipment and jobsite handling.
2. Riser couplings are not furnished by Whalen, unless otherwise noted.
3. Sleeve hole dimensions are recommended minimums.
4. "Riser size" refers to the larger of the supply and return risers on each unit.
5. Riser spacing shown accommodates 2" risers with 1/2" armaflex Insulation (standard) and 1" condensate drain riser with optional 3/8" armaflex insulation.
6. See drawing 622-ITR for TRU connections.

RISER SIZE	MINIMUM J	MINIMUM K
3/4	6	10
1	6	10
1 1/4	6	10
1 1/2	6	10
2	6	10

All dimensions in inches.

DRAWING NUMBER 408-PT-ITR
JANUARY 2020

2 Pipe Unit with Internal Drain Pan - Split Riser Location

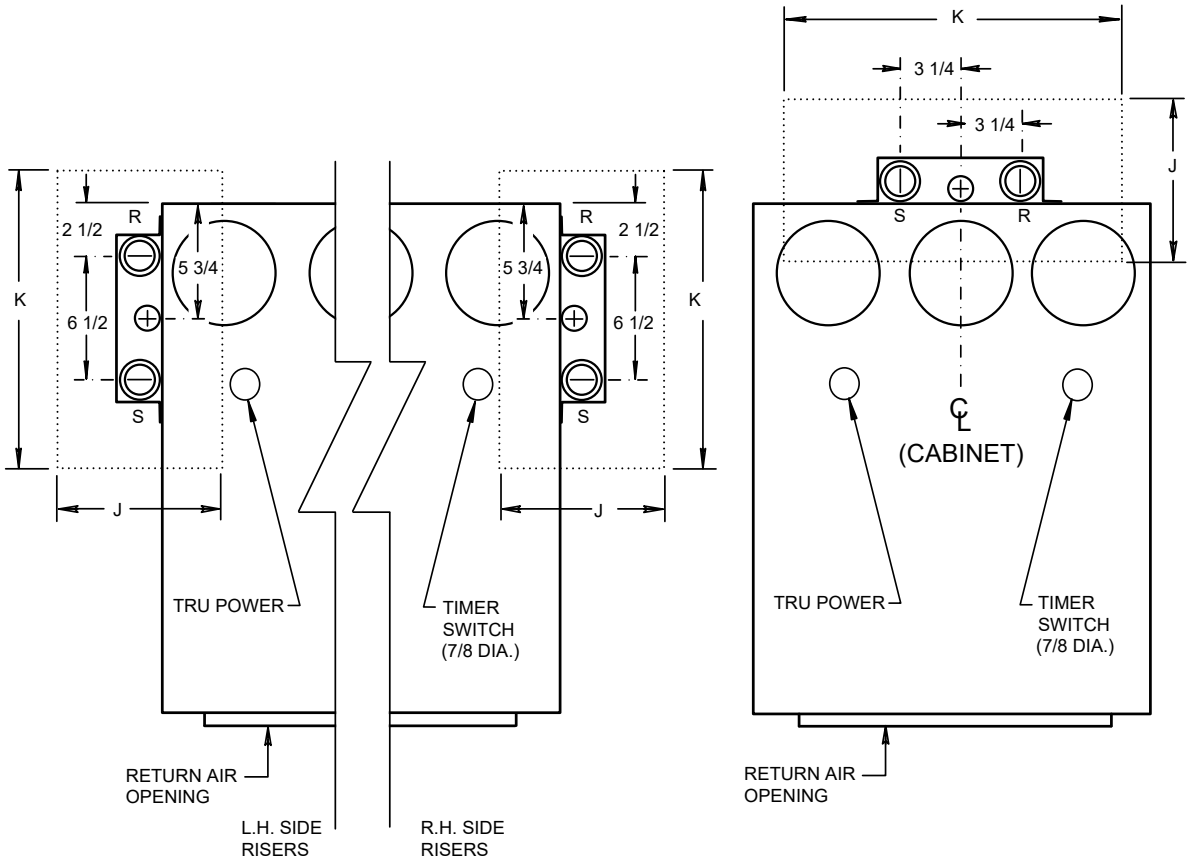

SIDE RISERS

REAR RISERS

Notes:

1. Risers are protected by a steel riser cover extending the height of the cabinet. Risers are soldered to a copper clamp to help prevent movement during shipment and jobsite handling.
2. Riser couplings are not furnished by Whalen, unless otherwise noted.
3. Sleeve hole dimensions are recommended minimums.
4. "Riser size" refers to the larger of the supply and return risers on each unit.
5. Riser spacing shown accommodates 2" risers with 1/2" armaflex Insulation (standard) and 1" condensate drain riser with optional 3/8" armaflex insulation.
6. See drawing 622-ITR for TRU connections.

RISER SIZE	MINIMUM J	MINIMUM K
3/4	6	12
1	6	12
1 1/4	6	12
1 1/2	6	12
2	6	12

All dimensions in inches.

DRAWING NUMBER 408-PT-ITR-VIC
FEBRUARY 2020

4 Pipe with Internal Drain Pan Risers by Others

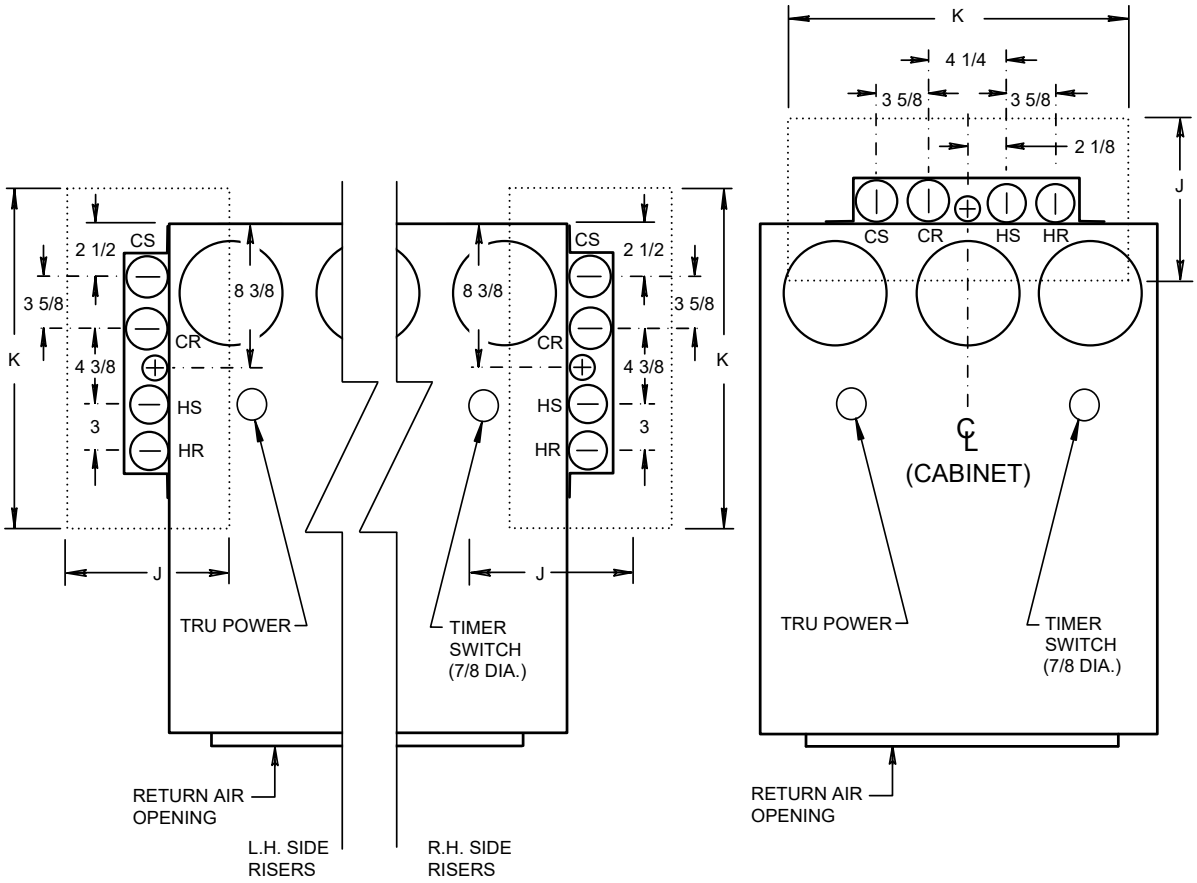

SIDE RISERS

REAR RISERS

Notes:

1. Risers are protected by a steel riser cover extending the height of the cabinet. Risers are soldered to a copper clamp to help prevent movement during shipment and jobsite handling.
2. Riser couplings are not furnished by Whalen, unless otherwise noted.
3. Sleeve hole dimensions are recommended minimums.
4. Supply riser is always towards the R.A. (front) on side riser units and to the right on rear riser units as indicated on drawing.
5. See drawing 622-ITR for TRU connections.

RISER SIZE	MINIMUM J	MINIMUM K
3/4	6	16
1	6	16
1 1/4	6	16
1 1/2	6	16
2	6	16
2 1/2	8	17

All dimensions in inches.

DRAWING NUMBER 409-PT-ITR
JANUARY 2020

Mechanical Specifications

TWO PIPE OR FOUR PIPE ROOM FAN-COIL UNIT

PART 1 GENERAL

1.01 SECTION INCLUDES

A. Two Pipe, Two Pipe "Cooling Only", or Four Pipe Room Fan-Coil Unit

1.02 RELATED SECTIONS

1.03 REFERENCES

A. ETL listed under W(N/T)Xiters Laboratories Standard for Safety UL 1995 4th Ed/CSA C22.2 No.236 4th Ed.

B. ANSI/AHRI Standard 440.

1.04 DELIVERY, STORAGE AND HANDLING

A. Manufacturer to deliver products to site by floor or customer specific request. Units to be stored, protect from the weather and construction debris prior to installation. Units must be individually packaged. Units must be tagged with site location, model number and configuration.

1.05 ENVIRONMENTAL REQUIREMENTS

A. Protect units from construction debris by covering all openings prior to start-up of the equipment. Units must not be used for heating, cooling, or ventilation prior to the start-up of equipment for permanent use. Use of the equipment for the temporary heating, cooling or ventilation is prohibited.

PART 2 PRODUCTS

2.01 TYPE

A. The fan-coil unit shall be of the factory assembled, integral fan type with hydronic cooling/heating coil, integral supply, return and drain risers and all accessories.

a. Provide a slide out, removable hydronic coil pack design that is not screwed or fastened to the cabinet. Coil pack shall be base mounted and utilize a slide rail permitting removal by simply disconnecting two hoses and a polarized electrical plug. Designs simply incorporating hoses and multiple coil fastening devices are unacceptable. The coil pack shall be shipped separately from the fan-coil cabinets to prevent exposure to, and fouling from finishing work.

2.02 CAPACITY

A. Shall be as indicated on the drawings or specifications, which are based on Whalen units.

2.03 CABINETS

A. The one-piece unit cabinet shall be fabricated of reinforced 22 gauge continuous G90 galvanized steel with front panel attached via button-lock seaming to prevent air leakage. All internal assemblies shall be welded and treated to prevent corrosion.

B. The cabinet shall be insulated with 1/2-inch thick 2-pound density thermal and acoustical fiberglass insulation having an integral water repellent, fungi and bacteria resistant barrier conforming to NFPA90A.

a. (OPTION 1) 1/2-inch thick elastomeric closed cell foam insulation. Insulation shall conform to NFPA 90A for fire, smoke and melting, and comply with a 25/50 Flame Spread and Smoke Developed Index per ASTM E-84 or UL 723.

b. (OPTION 2) 1/2-inch thick 1 1/2-pound density thermal and acoustical fiberglass insulation having an aluminum foil-faced coating conforming to NFPA90A.

C. The cabinet shall allow the placement of vertical risers on any side not being used for service access or discharge air openings.

D. The cabinet will have slots with edge protectors to accommodate movement of the risers with the isolation valves affixed. The slots shall remain covered with insulation to minimize air infiltration.

E. Cabinet return and discharge air openings shall be factory cut and flanged on all sides. All insulation located behind cabinet openings must be removed by the unit manufacturer prior to shipment.

2.04 COIL

A. The coil shall incorporate a manual air vent and be constructed of seamless copper tubing mechanically expanded into aluminum plate. Coil assembly shall be tested at the factory at not less than 320 PSIG.

2.05 FACTORY HYDRONIC PIPING

A. The hydronic control valve shall be an electric two-way, two-position type with a 25-psi minimum shut-off differential and utilize fully removable power assemblies. Units to include one two-position control valve for chilled-water or heating coil in addition to a quantity of two ball valves with a two-piece, bronze body with full-port, chrome-plated bronze ball; with PTFE or TFE seats. Flexible high-pressure stainless steel hose kits to connect coil to risers

a. (OPTION 1) Balancing Valves: Bronze body, ball type; 125-psig (860-kPa) working pressure, 250-deg F (121-deg C) maximum operating temperature; with calibrated orifice or venturi, connections for portable differential pressure and temperature meter with integral seals, threaded ends, and equipped with a memory stop to retain set position.

b. (OPTION 2) Automatic Flow-Control Valve: Brass or ferrous-metal body; 300-psig (2070-kPa) working pressure at 250 deg F (121 deg C), with removable, corrosion-resistant, tamperproof, self-cleaning piston spring. Valve to be factory set to maintain constant indicated flow over operating range of valve.

c. (OPTION 3) Automatic Flow-Control Valve: Brass or ferrous-metal body; to include one or more precision sculptured brass or polyphenylsulfone orifi with an elastomeric diaphragm. Each valve will automatically control flow to within +/- 10% of its rated flow, over a temperature range of 32 to 225ºF, and a pressure differential range of 2 to 80 psid.

d. (OPTION 4) Y-Pattern Hydronic Strainers: Brass or ferrous-metal body (ASTM A 126, Class B); 125-psig (860-kPa) working pressure; with threaded connections, bolted cover, perforated stainless-steel basket, and bottom drain connection. Valve to include connection for hose-bib, full-port, ball-type blowdown valve in drain connection.

2.06 RISERS

A. The unit shall incorporate a factory assembled type "M" copper supply, return and drain risers of suitable length to reach floor-to-floor without additional contractor furnished material. All risers shall be protected by a galvanized steel pipe chase the length of the cabinet. The supply and return risers shall be insulated the length of the cabinet with ½" thick Armaflex or equal closed cell insulation. The drain riser shall be factory insulated with 3/8" thick Armaflex or equal closed cell insulation the length of the cabinet.

a. (OPTION 1) The unit shall incorporate a factory assembled type "L" copper supply, return and drain risers of suitable length to reach floor-to-floor without additional contractor furnished material.

b. (OPTION 2) The supply, return and drain riser extensions shall be factory-insulated with ½ inch Armaflex or equal on the chilled water and hot water riser and 3/8 inch Armaflex or equal on the drain riser.

2.07 DRAIN PAN

A. Drain pan shall collect and drain condensate that may form from any component internal to the fan-coil unit and shall be fabricated of welded and soldered 20 Ga. 304 stainless steel. The flexible hose drain shall include a water trap and be attached to the pan on a copper stub that is rolled and soldered into the pan.

2.08 FANS

A. The fan shall be slow speed forward curved centrifugal type, and shall be accessible for removal and maintenance through the return air opening.

2.09 MOTORS

A. Motors shall be electronically commutated high-efficiency, programmable brushless DC, totally enclosed, permanently lubricated sleeve bearing, type with automatic reset integral thermal overload protection and resiliently mounted. The ECM fan motor shall provide soft starting and maintain constant torque output over its operating range.

2.10 SUPPLY GRILLES

A. (STANDARD) The supply grilles shall be of the single deflection type fabricated of clear anodized aluminum. All supply openings shall be painted black with a damper assembly and sight baffle provided when one unit is serving two separate rooms.

(OPTION 1) The supply grilles shall be of the single deflection type fabricated of (factory white painted extruded aluminum) or (custom painted extruded aluminum) (SELECT ONE). All supply openings shall be painted black with a damper assembly and sight baffle provided when one unit is serving two separate rooms.

(OPTION 2) The supply grilles shall be of the double deflection type fabricated of (clear anodized extruded aluminum), (factory white painted extruded aluminum) or (custom painted extruded aluminum) (SELECT ONE). All supply openings shall be painted black with a damper assembly and sight baffle provided when one unit is serving two separate rooms.

2.11 RETURN AIR PANEL

A. (STANDARD) Unit Mounted Acoustical Panel - The return air opening shall be covered with a standard solid hinged front acoustical panel with return air entering through the bottom, top and both sides. The front panel shall be fabricated of etched galvanized steel painted appliance white. The return air panel shall allow for filter maintenance without the use of tools and be secured shut via magnets. The door opening shall be sized to allow direct removal of the cabinet inner panel and coil pack.

B. The supply air section of the panel shall include a removable hinged door secured shut by magnets. The door opening shall be sized to allow either servicing or direct removal of the thermal recovery unit. The door shall house the supply air grille, sized per schedule.

C. Standard supply air grille opening shall include snap-in style spring clip on each side to secure the supply air grille. Grilles shall be shipped with return air panel but NOT INSTALLED in the removable hinged door.

2.12 FILTERS

A. Standard filter shall be 1" thick disposable fiberglass media, MERV 4.

a. (OPTION 1) Filters shall be 1" thick disposable pleated media, MERV 8.

b. (OPTION 2) Filters shall be 1" thick disposable pleated media, MERV 11.

b. (OPTION 3) Filters shall be 1" thick disposable pleated media, MERV 13.

d. (OPTION 4) Filters shall be 1" thick permanent aluminum cleanable media, MERV 4.

2.13 THERMAL ENERGY RECOVERY SECTION / OUTDOOR AIR

A. Cabinets shall be supplied with a thermal recovery unit that is easily accessible and removable for servicing. Duct connections for the thermal recovery unit shall be standard 5 inch diameter.

B. The thermal recovery unit shall be fabricated from heavy-gauge galvanized steel. A ½ inch drain hose emptying into the cabinet drain pan shall be provided. A positive closing damper shall be included on the exhaust air discharge duct connection. Electrical connection for the module shall be made by a male plug into a female receptacle supplied in the cabinet.

C. Air filters shall be supplied for the fresh air and exhaust air flows. Filters shall be easily serviced or replaced through the front of the unit. Filters shall be washable.

D. The thermal recovery unit shall house fresh air and exhaust air blowers. Blowers shall be statically and dynamically balanced, direct drive, single phase with integral thermal overload protection. The blower wheel shall be the forward-curved SWSI centrifugal type.

E. The fresh air and exhaust air blower speed shall be set at the factory.

F. The thermal recovery core shall be protected by a defrost sensor that terminates operation of the fresh air blower.

G. (OPTION 2) An optional timed washroom exhaust control with reset to be provided with decorative momentary switch to activate the exhaust fan for a maximum of 20 minutes.

H. (OPTION 3) Factory set dedicated constant ventilation rate selection 1) 25 CFM 2) 35 CFM 3) 50 CFM 4) 70 CFM 5) 90 CFM.

I. (OPTION 4) Factory set nominal intermittent exhaust rate high speed selection 1) 100 CFM 2) 150 CFM when used in conjunction with optional timed momentary switch.

2.14 POWER SUPPLY

A. The unit manufacturer shall furnish a 115/1/60 single source single point power connection for the main fan and thermal recovery unit fans. Power connections are made to the unit junction box through a 7/8" knockout located on both the left and right sides of the unit as shown on the drawings.

(OPTION) The unit manufacturer shall furnish a (208/1/60 or 265/1/60) (SELECT ONE) dual source single point power connection for the main fan. Power connections are made to the unit junction box through a 7/8" knockout located on both the left and right sides of the unit as shown on the drawings. The unit manufacturer shall furnish 115/1/60 point power connection for the thermal recovery unit fans. Power connections are made to the unit junction box through a 7/8" knockout located on both the top of the unit as shown on the drawings.

B. Field power connection for the optional decorative momentary switch connection are made through 7/8" knockouts located on the top of the cabinet as shown on the drawings.

2.15 DISCONNECT

A. (OPTION 1) Each unit shall include a non-fused disconnect switch, factory mounted and wired.

(OPTION 2) Each unit shall include a supplemental overcurrent protector (circuit breaker), factory mounted and wired.

2.16 CONTROLS

A. Two Pipe, Two Pipe "Cooling Only", or Four Pipe Room Fan-Coil Unit

a. (OPTION 1) The unit manufacturer shall furnish a 24-volt thermostat that shall plug into the unit through a polarized male-female plug. The thermostat shall be of the automatic changeover type and incorporate a HI-MED-LO fan speed switch.

b. (OPTION 2) The unit manufacturer shall furnish a (24-volt or 115-volt) (SELECT ONE) thermostat for remote mounting. The unit shall be provided with a junction box for connection of the thermostat field wiring to the top or bottom of the unit as shown in the drawings. The thermostat shall be of the automatic changeover type and incorporate a HI-MED-LO fan speed switch.

2.17 SPARE PARTS

A. (ADD ANY SPARE PART REQUIREMENT HERE)

PART 3 EXECUTION

3.01 INSTALLATION

A. Furnish as shown on the drawings and as specified herein, with capacity and electrical characteristics as scheduled. Units shall be Room Fan Coil as manufactured by The Whalen Company of Easton, MD.

B. Install in accordance with manufacturer's installation instructions. Install units plumb and level, and maintain manufacturer's recommended clearances for the unit and accessories.

The Whalen Company

The Whalen Company Limited Express Warranty Room Fan Coil Standard Warranty

The Whalen Company warrants to the purchaser each water-to-air heat pump to be free from original defects in materials and workmanship.

Where inspection by an authorized representative of The Whalen Company confirms such defects to be present, for a period of eighteen months from date of shipment, Whalen will furnish replacement components or materials to the original purchaser without charge.

This Limited Express Warranty is intended to cover original equipment defects only and does not cover or apply to: (1) Air filters, refrigerant, fluids, oil; (2) Equipment relocated after initial installation; (3) Any portion or component of any system that is not supplied by The Whalen Company, regardless of the cause of the failure of such portion or component; (4) Equipment on which the unit identification tags or labels have been removed or modified; (5) Equipment which have defects or damage which result from improper installation, wiring, electrical imbalance characteristics or maintenance; or are caused by accident, misuse or abuse, fire, flood, acts of God, alteration or misapplication of the product; (6) Equipment used as temporary heating or cooling while the facility is still under construction is considered misuse and as such, will void all warranty coverage regardless of the cause of failure; (7) Equipment which have defects or damage which result from a contaminated or corrosive air or liquid supply, operation at abnormal temperatures, or unauthorized opening of refrigerant circuit; (8) Mold, fungus or bacteria damages; (9) Equipment subjected to corrosion or abrasion; (10) Equipment manufactured or supplied by others; (11) Equipment which have been operated in any manner contrary to The Whalen Company printed instructions; or (12) Equipment which have defects, damage or insufficient performance as a result of insufficient or incorrect system design or the improper application of The Whalen Company products.

The Whalen Company neither assumes nor authorizes any person to assume for it any obligation or warranty other than those stated herein.

This Limited Express Warranty does not cover labor charges associated with making repairs, inspection and diagnosis of malfunctions, all field labor in connection with repair or replacement of parts, all field labor in connection with removal and transportation to and from a repair facility and all field labor in connection with reinstallation after repairs are completed. However, The Whalen Company at its sole discretion may provide a labor allowance in cases of DOA (Dead on Arrival) equipment for replacement or repair of defective components within 30-days of start-up or 90-days from factory shipment, whichever comes first. After this period only the Limited Express Warranty will apply. Labor will be paid per The Whalen Company Warranty Labor Allowance schedule.

Replacement or repair under this warranty will not extend the warranty time periods defined above. Whalen shall not, in any event, have any liability under this warranty unless and until it has been paid in full for the equipment supplied. The warranty period shall commence on the date of shipment, however, whether or not payment has been made.

This warranty applies only to Whalen heat pump installations in the fifty United States and in Canada. There are no warranties outside those areas.

The Whalen Company has no liability for incidental or consequential damages arising out of the ownership, use or operation of Whalen heat pumps.

THERE ARE NO WARRANTIES WHICH EXTEND BEYOND THE DESCRIPTION ON THE FACE HEREOF. NO IMPLIED WARRANTY OR MERCHANTABILITY SHALL ACCOMPANY THE SALE OF THIS EQUIPMENT, AND THIS EXPRESS WARRANTY IS INTENDED TO AND DOES REPLACE ANY IMPLIED WARRANTY OF MERCHANTABILITY.

This warranty, its limitations and its exclusions are to be governed by the laws of Maryland. Although some warranties may vary in their effect and coverage from locality to locality, this warranty, its effects, coverage and remedies are only those available in Maryland.

Rev: 12/2020

The Whalen Company

The Whalen Company
Limited Express Warranty
Room Fan Coil Two Year Warranty

The Whalen Company warrants to the purchaser each fan coil unit to be free from original defects in materials and workmanship.

Where inspection by an authorized representative of The Whalen Company confirms such defects to be present, for a period of twenty four months from date of shipment, Whalen will furnish replacement components or materials to the original purchaser without charge.

This Limited Express Warranty is intended to cover original equipment defects only and does not cover or apply to: (1) Air filters, refrigerant, fluids, oil; (2) Equipment relocated after initial installation; (3) Any portion or component of any system that is not supplied by The Whalen Company, regardless of the cause of the failure of such portion or component; (4) Equipment on which the unit identification tags or labels have been removed or modified; (5) Equipment which have defects or damage which result from improper installation, wiring, electrical imbalance characteristics or maintenance; or are caused by accident, misuse or abuse, fire, flood, acts of God, alteration or misapplication of the product; (6) Equipment used as temporary heating or cooling while the facility is still under construction is considered misuse and as such, will void all warranty coverage regardless of the cause of failure; (7) Equipment which have defects or damage which result from a contaminated or corrosive air or liquid supply, operation at abnormal temperatures, or unauthorized opening of refrigerant circuit; (8) Mold, fungus or bacteria damages; (9) Equipment subjected to corrosion or abrasion; (10) Equipment manufactured or supplied by others; (11) Equipment which have been operated in any manner contrary to The Whalen Company printed instructions; or (12) Equipment which have defects, damage or insufficient performance as a result of insufficient or incorrect system design or the improper application of The Whalen Company products.

The Whalen Company neither assumes nor authorizes any person to assume for it any obligation or warranty other than those stated herein.

This Limited Express Warranty does not cover labor charges associated with making repairs, inspection and diagnosis of malfunctions, all field labor in connection with repair or replacement of parts, all field labor in connection with removal and transportation to and from a repair facility and all field labor in connection with reinstallation after repairs are completed. However, The Whalen Company at its sole discretion may provide a labor allowance in cases of DOA (Dead on Arrival) equipment for replacement or repair of defective components within 30-days of start-up or 90-days from factory shipment, whichever comes first. After this period only the Limited Express Warranty will apply. Labor will be paid per The Whalen Company Warranty Labor Allowance schedule.

Replacement or repair under this warranty will not extend the warranty time periods defined above. Whalen shall not, in any event, have any liability under this warranty unless and until it has been paid in full for the equipment supplied. The warranty period shall commence on the date of shipment, however, whether or not payment has been made.

This warranty applies only to Whalen fan coil unit installations in the fifty United States and in Canada. There are no warranties outside those areas.

The Whalen Company has no liability for incidental or consequential damages arising out of the ownership, use, or operation of Whalen fan coil units.

THERE ARE NO WARRANTIES WHICH EXTEND BEYOND THE DESCRIPTION ON THE FACE HEREOF. NO IMPLIED WARRANTY OR MERCHANTABILITY SHALL ACCOMPANY THE SALE OF THIS EQUIPMENT, AND THIS EXPRESS WARRANTY IS INTENDED TO AND DOES REPLACE ANY IMPLIED WARRANTY OF MERCHANTABILITY.

This warranty, its limitations and its exclusions are to be governed by the laws of Maryland. Although some warranties may vary in their effect and coverage from locality to locality, this warranty, its effects, coverage, and remedies are only those available in Maryland.

Rev: 12/2020

Inteli-therm™ Design Guide Revision Table

Date	Description
7/8/2020	New Release of Document
12/8/2020	Updated Warranty Certificates
1/19/2022	Added unit sizes 10 & 12

The Whalen Company works continually to improve its products. As a result, the design and specifications of each product at the time of order may be changed without notice and may not be as described herein. Please contact The Whalen Company's Customer Service Department at 1-410-822-9200 for specific information on the current design and specifications. Statements and other information contained herein are not express warranties and do not form the basis of any bargain between the parties, but are merely The Whalen Company's opinion or commendation of its products. The latest version of this document is available at whalencompany.com

The Whalen Company

P.O. Box 1390 ▪ Easton, MD 21601 USA
whalencompany.com